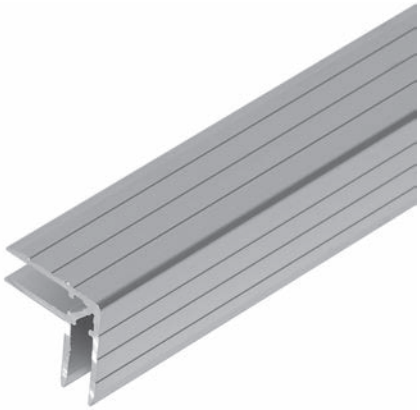

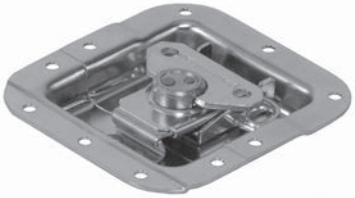

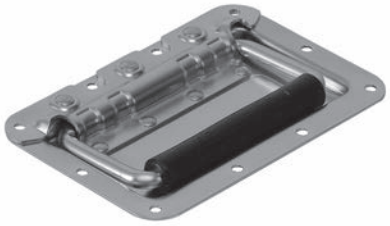

PENN ELCOM

Europe Edition No. 14

Deutsch / English

Checkliste / Check List

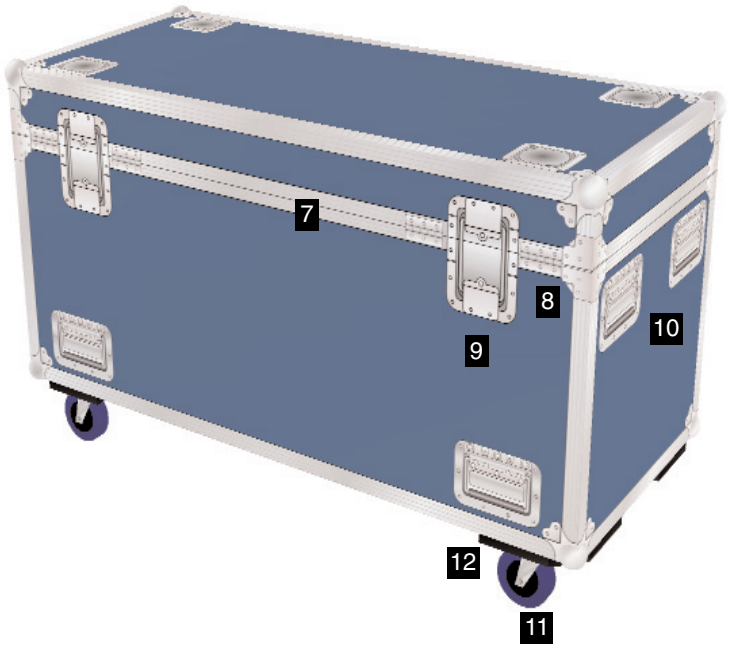

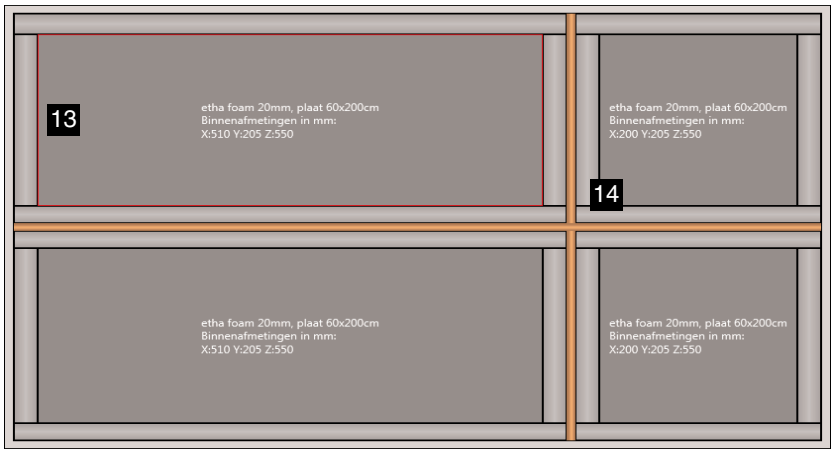

1:
Baumaterial
Panels

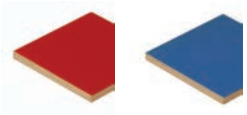

2:
Profile
Extrusions

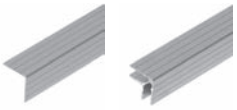

3:
Schließprofil
Lid Location

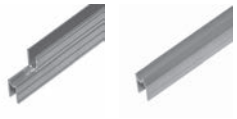

4:
Ecken
Corners

5:
Schließwinkel
Braces

6:
Verschlüsse
Locks

7:
Scharnierband
Piano Hinges

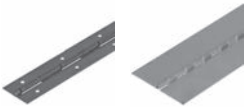

8:
Scharnierstück
Hinge

9:
Einbauaufsteller
Lid Stay

10:
Griffe
Handles

11:
Rollen
Castors

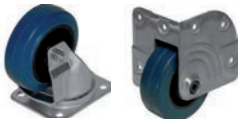

12:
Montageplatte
Castor Plate

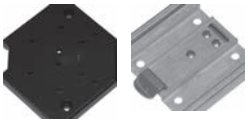

13:
Schaumstoff
Foam

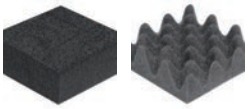

14:
Innenausbau
Interior Fittings

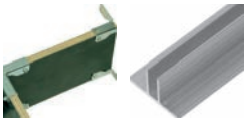

15:
Nieten
Rivits/Screws

Inhalt - Contents

Checkliste - Checklist 1
Inhalt - Contents 2
Case Designer 2a
N-Case 2 Case System 2e
N-Case 1 Case System 2g
Baumaterial - Oberflächen / Laminated Panels 2i
Baumaterial - Panels 3
Con-Pearl™ 4
Slam Lid System 4a
Alveobloc 4b
Schaumstoff - Foam 5
Plywood-Con Pearl® > Extrusion Guide 7a
Profile R2 - Extrusions R2 8
Profile R5 - Extrusions R5 12
Profile - Extrusions 13
Schließprofil - Lid Location 16
Anti-Vibration Rack System 19a
Rackschienen - Rack Strips 20
Ecken R2 - Corners R2 25
Ecken R5 - Corners R5 34
Schließwinkel R2 - Braces R2 38
Schließwinkel R5 - Braces R5 42
Verschlüsse - Locks 43
Smart Latch Case System 49a
Scharnierband - Piano Hinges 56
Scharniere / Aufsteller - Hinges / Lid Stays 57
Griffe - Handles 63
Rollen - Castors 72
Gummifüße - Feet 77
Gleitknöpfe - Glides 78
Einbauschalen - Dishes 81
Lack - Paint 84
Innenausbau - Interior Fittings 85
Specials - Specials 90
TV Lifter - TV Lift 91a
Befestigungsmittel - Rivets / Screws 91b
Kistenbeschläge - Crating 92
Boxen-Zubehör - Speaker Cabinet Fittings 98
Server-Schrank / Server Rack Enclosures 107a
Rack zur Wandmontage - Wall Mount Enclosures 107b
Rack zur Wandmontage - Double Section Wall Rack 107c
Flat Pack Racks 107d
Open Tower Rack System 107e
Schubladen mit Schloß - Rackdrawers with lock 107f
Rackzubehör - 19” Racking 108
Neutrik-Steckverbindungen - Neutrik Connect 120
On Tour - On Tour 123
Aluminium Transformer Box 127a
Clamp for lighting truss 127b
Index 128

PRODUCT INFORMATION

YOUR NEW POWERFUL TOOL FOR FLIGHTCASE DESIGN AND COST CALCULATION

penn ELCOM®
Case Designer Software

The Penn-Elcom Casedesigner software begins a new era in flightcase construction. At last, it is possible to visualize case designs in the planning stage including 2 or 3D representations and full 360 degree rotation, and at the same time generate sheet cutting sizes, a list of all the component parts and their cost. Whether you are making similar cases repeatedly or 'one offs' the user design interface is clear, simple to use and a sheer joy to work with, enabling cases to be designed and made faster and easier, saving you time effort and avoiding costly mistakes by obtaining customer approval to finilazed designs and specifications.

Designing flight cases:

• In no time at all you will design flight cases on your computer screen using the mouse to select basic design types. Your case will be displayed as a 3 dimensional representation which can be rotated and tilted, enabling you to view from all sides and from every angle.

• The realistic visualization will assist you and your customer to evaluate important aspects of case design such as the number size and type of catches, and the optimum placement of handles and other fittings.

• A comprehensive choice of Penn-Elcom parts that are already fully drawn and accurately measured are available for you to incorporate into your designs, however there is also a facility (within a limited range) to add your own parts.

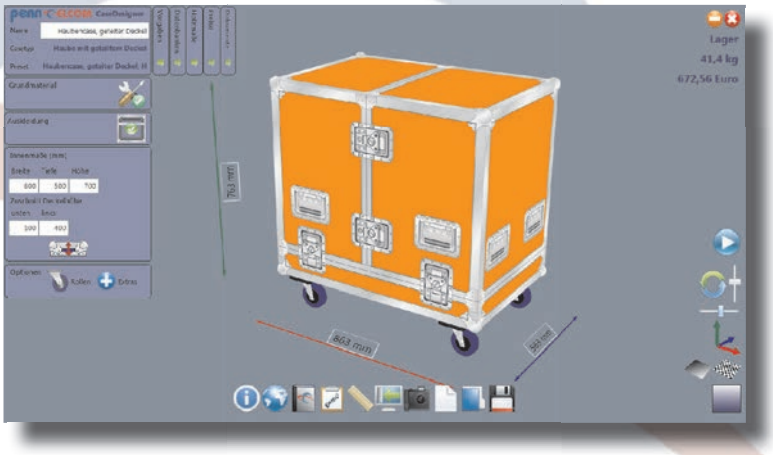

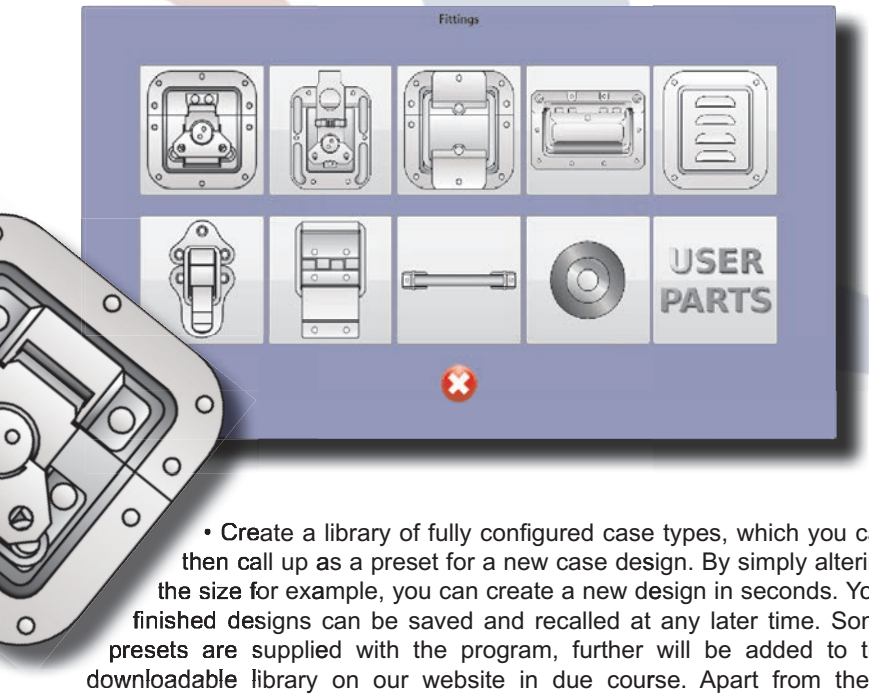

• The interior of the case, with or without dividers or foam lining can be specified.

• Any extras such as accessories, custom parts, third party services or material costs and labour rates can be calculated.

• Create a library of fully configured case types, which you can then call up as a preset for a new case design. By simply altering the size for example, you can create a new design in seconds. Your finished designs can be saved and recalled at any later time. Some presets are supplied with the program, further will be added to the downloadable library on our website in due course. Apart from these presets, you can also import and export files with fully designed cases.

PENN ELCOM GMBH · DECHANT-SPRÜNKEN-STR.49B · DE-46446 EMMERICH
Phone: +49 2822 91303 3 · Fax: +49 2822 91303 50 · Mail: post.eu@penn-elcom.com
HARDWARE PRODUCTS AND GROUP: www.penn-elcom.com

Output

Directly on screen is displayed the external dimensions, weight and cost calculation according to your basic requirements of each case design which can be viewed in the form of a detailed table.

For production purposes there are cutting lists and details of mounting positions of hardware. Much of the data can also be saved in comma-seperated values (CSV) format used by programs such as Excel, to enable them to be easily exported into other compatible applications.

The computer generated 3D images can be incorporated into documents or lists at the click of a button. Images can also be saved for presentation purposes at a later date.

Flight case manufacturers of any size can generate professional, accurate quotations, order confirmations, delivery notes and even invoices for customers. All these items can be printed or e-mailed.

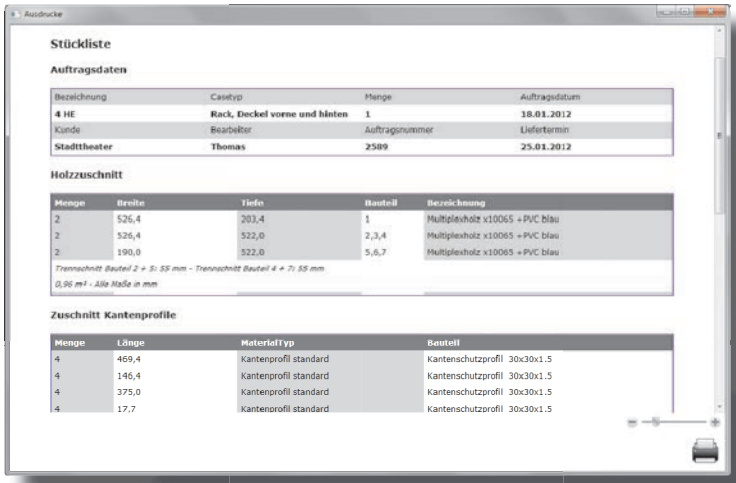

Materials Management

All the catalogue items in the current Penn Elcom range are included in the databases supplied which can be updated online as we add new products. Together with the program, and subsequent to any updates issued you will also receive our updated price list which will include details of any special quantity price agreements we have negotiated with you, as well as payment discounts, such as that offered for payment by direct debit.

When you have finalized your design within seconds you will be able to see the cost of the parts, and this can be used to enter an order into our system thus minimising the potential for errors. You can even use this as a template for subsequent orders.

The Penn-Elcom CaseDesigner can be downloaded for your evaluation FREE OF CHARGE.

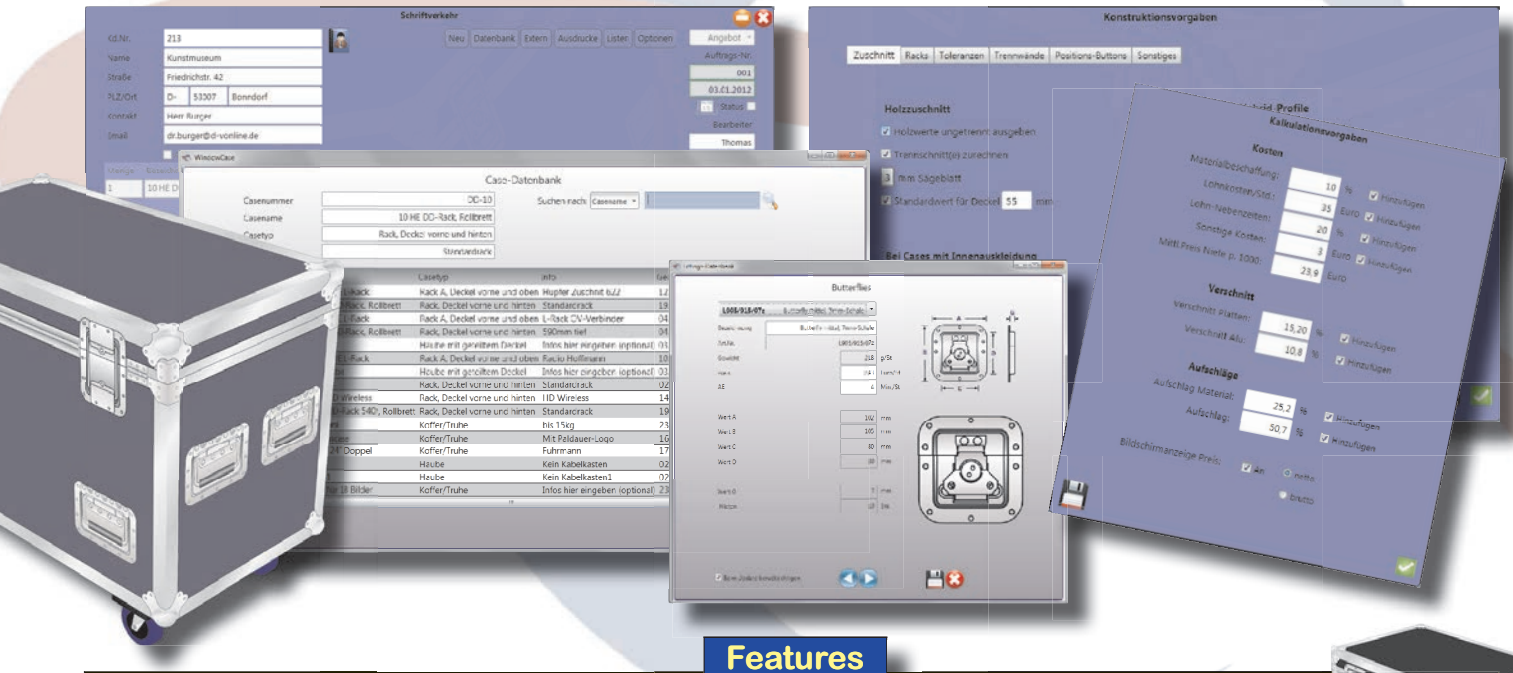

Features

Design
- 3D-design of flightcases
- 2D and 3D screen
- Models rotatable 360 and scaleable
- Produced in seconds
- Real scale

Output
- Parts list
- Calculation list
- Print, Pdf, Excel
- Data export
- Email module
- Photo function

Data bases
- Cases
- Presets
- Fittings
- Customers
- Documents
- Data synchronisation

Construction
- Many design preset
- Free editable parameters for calculation and construction
- Hundreds of components available
- Lining and dividers

Materials Management
- Order module
- Parts list
- One click pricelist update
- Material lists
- Export functions

Other Functions
- Networkable
- Online catalogue
- Editable backgrounds
- Passwords for different levels

www.Penn-Elcom-CaseDesigner.com

PENN ELCOM GMBH · DECHANT-SPRÜNKEN-STR.49B · DE-46446 EMMERICH
Phone: +49 2822 91303 3 · Fax: +49 2822 91303 50 · Mail: post.eu@penn-elcom.com
HARDWARE PRODUCTS AND GROUP: www.penn-elcom.com

PRODUKT-INFO

IHR NEUES STARKES WERKZEUG FÜR DIE FLIGHTCASE KONSTRUKTION UND -KALKULATION

penn ELCOM® Case Designer Software

Mit dem Penn Elcom CaseDesigner beginnt eine neue Epoche im Flightcasebau. Endlich ist es möglich, Ideen bereits in der Planungsphase zu visualisieren. Während Sie ein Flightcase auf dem Bildschirm erstellen, wird dieses zeitgleich kalkuliert.
Das exklusiv für uns entwickelte Programm ist konsequent zu Ihrem Nutzen ausgerichtet und lässt sich intuitiv bedienen. Die Oberflächengestaltung und die 3D-Objektdarstellungen lassen die Arbeit zur Freude werden.

Hier die wesentlichen Features:

Designen von Flightcases

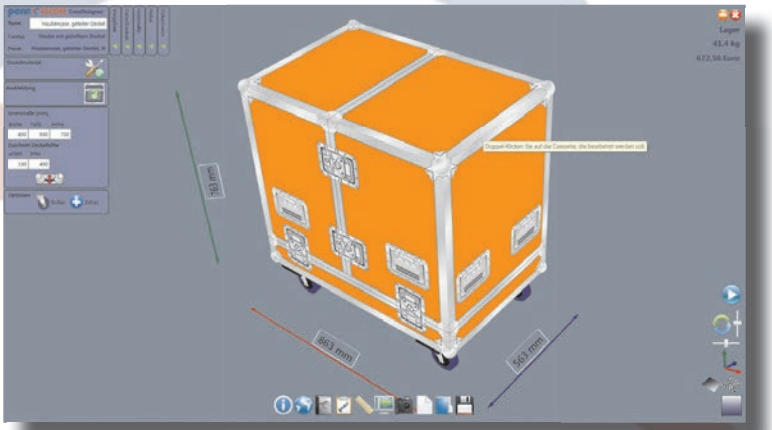

• Konstruieren Sie mit der Maus auf Ihrem Bildschirm auf Basis von Grundbautypen in kurzer Zeit Flightcases, die dreidimensional und maßstabsgerecht dargestellt werden und von jeder Seite und aus jeder Perspektive betrachtet werden können.

• Die wirklichkeitsgetreue Präsentation hilft Ihnen und Ihren Kunden dabei, die Handhabung des Cases zu beurteilen und die optimale Anzahl und Position der Beschläge zu bestimmen.

• Ein umfangreiches Sortiment von Penn-Elcom-Bauteilen steht für Ihre Konstruktionsarbeit fertig gezeichnet und bemaßt zur Auswahl. Eigene Bauteile können Sie (im beschränkten Umfang) selbst ergänzen.

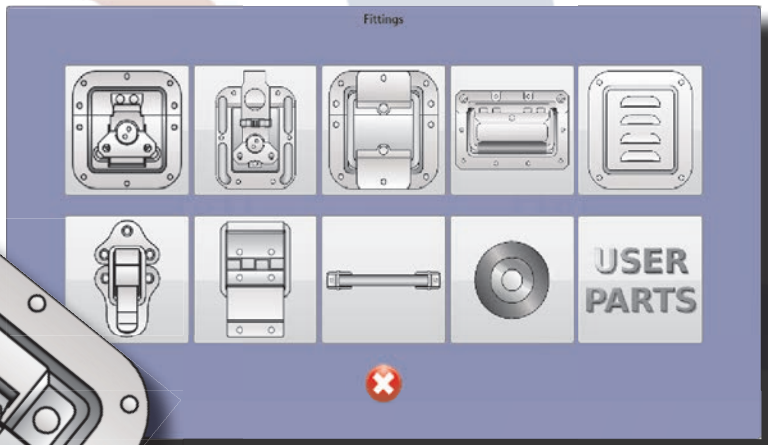

• Legen Sie für den Innenbereich des Cases Facheinteilungen und (Schaumstoff-) Auskleidung fest.

• Erfassen Sie zu Ihrer Case-Kalkulation Zubehör, Sonderteile, Fremdleistungen oder Materialkosten und Arbeitszeit für aufwendige Inneneinrichtungen als „Extras“.

• Legen Sie sich eine Bibliothek von fertig konfigurierten Casetypen an, die Sie dann als Basis („Presets“) für eine neue Case-Konstruktion aufrufen. Durch einfaches Ändern z.B. der Maße erstellen Sie diese damit in wenigen Sekunden. Einige Presets werden mit dem Programm ausgeliefert, weitere können Sie sich von unserer Website herunterladen. Neben den Presets können Sie auch Dateien von fertig designten Cases im- und exportieren.

PENN ELCOM GMBH · DECHANT-SPRÜNKEN-STR.49B · DE-46446 EMMERICH
Phone: +49 2822 91303 3 · Fax: +49 2822 91303 50 · Mail: post.eu@penn-elcom.com
HARDWARE PRODUCTS AND GROUP: www.penn-elcom.com

Output

Unmittelbar auf dem Bildschirm sehen Sie die Außenmaße, das Gewicht und den nach Ihren Grundvorgaben kalkulierten Preis des Cases.
Die Kalkulation ist in Form einer detaillierten Tabelle einsehbar.
Für die Produktion stehen Stücklisten, und Zuschnittlisten mit Positionsangabe zur Montage der Schnittstücke zur Verfügung.
Viele Daten können auch im CSV-Format für andere Anwendungen exportieren.
Die elektronisch erzeugten 3D-Bilder der betreffenden Cases können in alle Schriftstücke und Listen per Mausklick eingebunden werden.
Diese Bilder können Sie auch für Präsentationszwecke gesondert sammeln.
Professionelle Flightcase-Hersteller können direkt aus dem Programm heraus Angebote, Aufträge, Auftragsbestätigungen, Lieferscheine und Rechnungen an ihre Kunden erstellen und z.B. per eMail versenden.

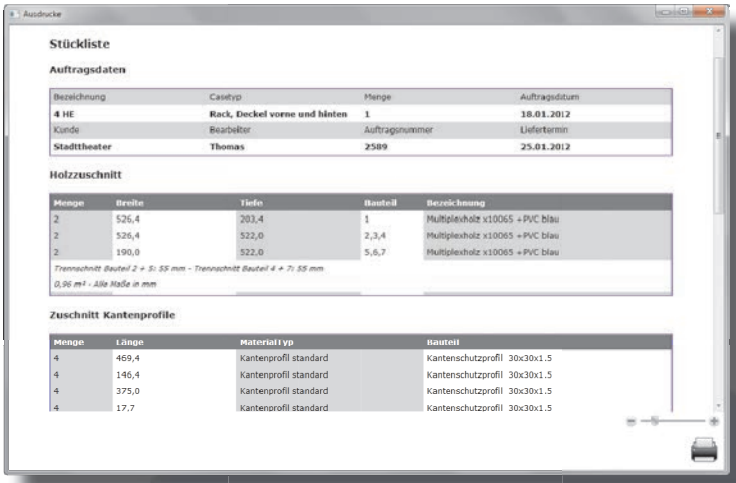

Materialwirtschaft

Alle Produkte unseres aktuellen Lieferprogramms sind in den mitgelieferten Datenbanken aufgeführt. Die Datenbank kann regelmäßig online upgedated werden.
Sie erhalten - mit dem Programm und nach Änderungen - als gesonderte Datei Ihre Preisliste zugesandt, in der auch evtl. Sonderpreisvereinbarungen und z.B. Bankeinzugsskonti berücksichtigt sind. Nach dem sekundenschnellen Einlesen werden Ihre Casekalkulationen dann nach dem neuesten Preisstand ermittelt.
In komfortabler Weise können Sie aus dem Programm heraus Bestellungen an uns senden. Jede so erfolgte Bestellung kann von Ihnen dann später bequem als Vorlage für Neubestellungen genutzt werden. Ihre Auftragspositionen werden in unserem System automatisiert eingelesen, was die Fehlerquote minimiert.
Sie können den Penn Elcom CaseDesigner kostenlos testen.

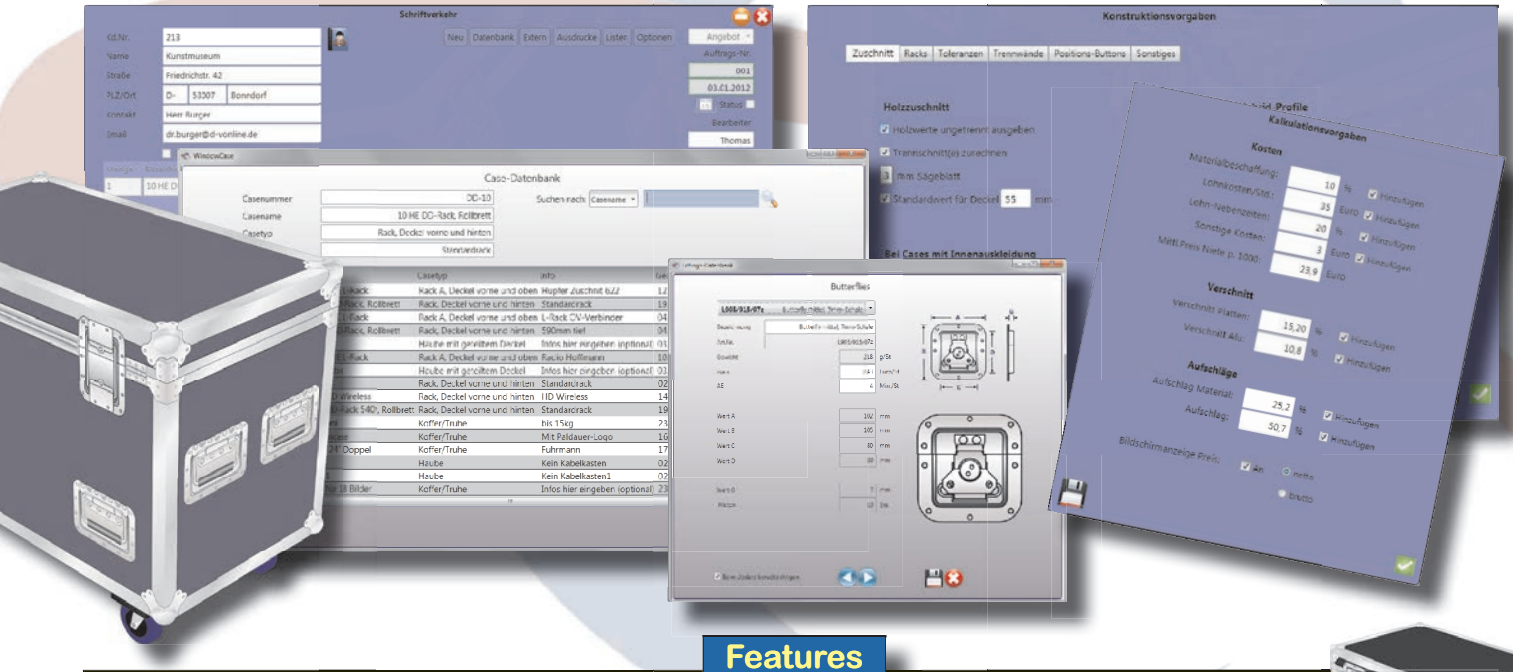

Features

Design
- 3D-Design von Flightcases
- 2D und 3D-Bildschirm
- Modelle frei dreh- und skalierbar
- Erstellung in Sekunden
- Realer Maßstab

Konstruktion
- Diverse Casemodelle wählbar
- Frei einstellbare Kalkulations- und
- Konstruktionsparameter
- Hunderte vorgefertigte Bauteile
- Auskleidung und Trennwände

Output
- Stückliste
- Kalkulationsliste
- Druck, Pdf, Excel
- Daten-Export
- Email-Modul
- Fotofunktion

Materialwirtschaft
- Bestell-Modul
- Fertigungsliste
- One-Click-Preislistenupdate
- Online-Katalog

Datenbanken
- Cases
- Presets
- Fittings
- Kunden
- Schriftverkehr
- Datensynchronisierung

Weitere Funktionen
- Komplett netzwerkfähig
- Online-Katalog
- Hintergrundfarben frei wählbar
- Passwörter für verschiedene Ebenen

www.Penn-Elcom-CaseDesigner.com

PENN ELCOM GMBH · DECHANT-SPRÜNKEN-STR.49B · DE-46446 EMMERICH
Phone: +49 2822 91303 3 · Fax: +49 2822 91303 50 · Mail: post.eu@penn-elcom.com
HARDWARE PRODUCTS AND GROUP: www.penn-elcom.com

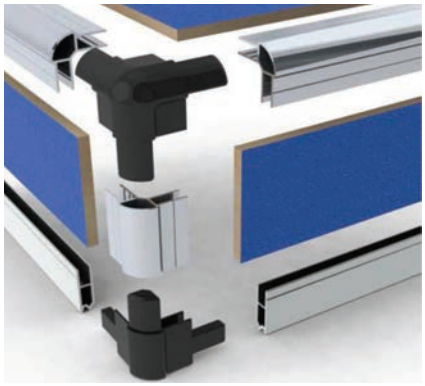

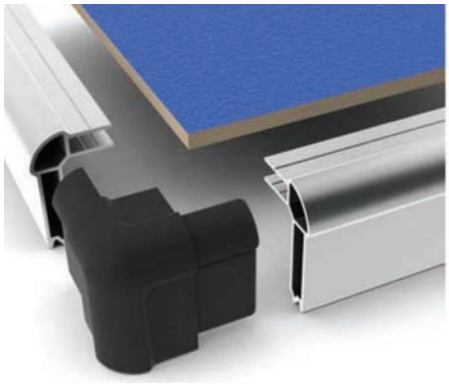

N-Case 2

Einschub für 7mm-Plattenstärke
Profile eloxiert
Stecksystem
Montage mit Nieten oder Tacker

N-Case 2

Casemaker for 7mm Wood/Plastic
Anodised Extrusions
Interlocking System
Assembly with Rivets or Tacker

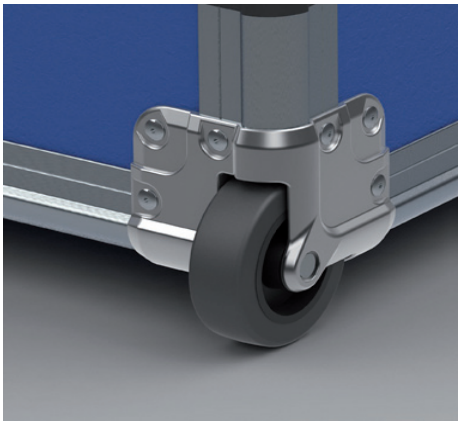

N-Case 2 Case System

NC2BC39k *Ecke für 39mm Bodenrahmenprofil*
Corner for 39mm Basemaker

NC2BE39 *Bodenrahmenprofil 39mm*
Basemaker 39mm

NC2BC54k *Ecke für 54mm Bodenrahmenprofil*
Corner for 54mm Basemaker

NC2BE54 *Bodenrahmenprofil 54mm*
Basemaker 54mm

NC2LC54k *Ecke für 54mm Deckelrahmenprofil*
Corner for 54mm Lidmaker

NC2LE54 *Deckelrahmenprofil 54mm*
Lidmaker 54mm

NC2C3K *Ecke für Casemaker*
Corner for Casemaker

NC2DAE *Casemaker, Einschub*
Casemaker 7mm

NC2HCBK *Ecke für Schließprofil Hybrid, Bodenteil*
Corner for Hybrid extrusion, Base Section

NC2HCLK *Ecke für Schließprofil Hybrid, Deckelteil*
Corner for Hybrid extrusion, Lid Section

NC2HE *Schließprofil Hybrid*/Hybrid Extrusion

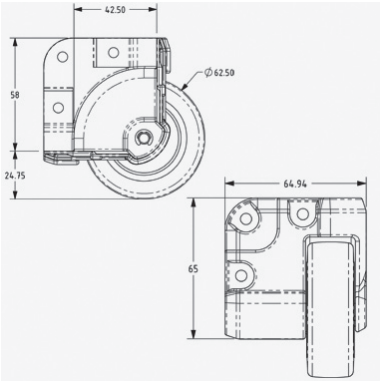

NC2W65-HK

Einbau-Eckrolle für N-Case2, 65mm,
Gehäuse schwarz

N-Case 2 Corner Castor 65mm
Black finish

N-Case 1 Case System

N-Case 1

Einschub für 5mm-Plattenstärke
Profile eloxiert
Stecksystem
Montage mit Kleber oder Tacker

N-Case 1

Casemaker for 5mm Wood/Plastic
Anodised Extrusions
Interlocking System
Assembly with Glue or Tacker

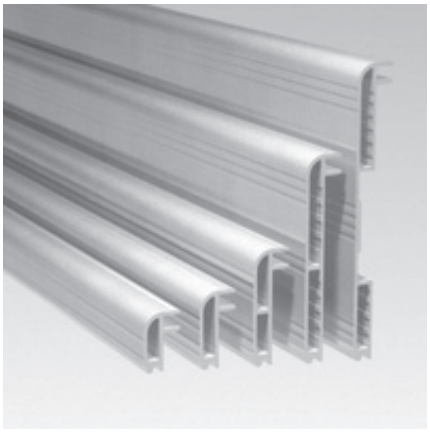

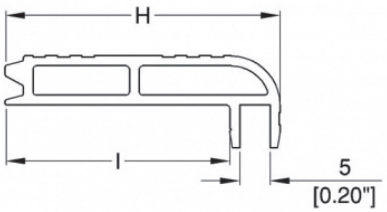

PART	H	I
NE3023L	23 / 0.9"	14.8 / 0.58"
NE3030L	30 / 1.18"	21.8 / 0.86"
NE3045L	45 / 1.77"	36.8 / 1.45"
NE3080L	80 / 3.14"	71.8 / 2.83"
NE3114L	113.6 / 4.47"	105.4 / 4.15"

NC2023LAS - NC2114LAS

Deckelrahmenprofil
Lid Maker Extrusion

NE2023LAS	23mm
NE2030LAS	30mm
NE2045LAS	45mm
NE2060LAS	60mm
NE2080LAS	80mm
NE2114LAS	114mm

Aluminium, Anodized

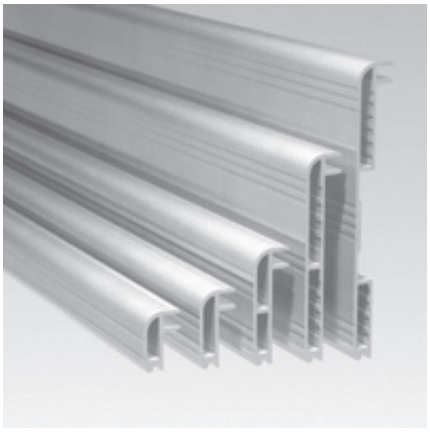

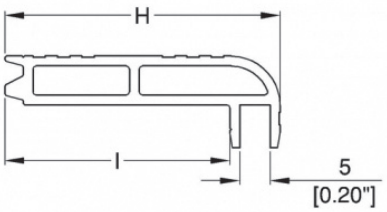

PART	H	I
NE3023B	23 / 0.9"	14.8 / 0.58"
NE3030B	30 / 1.18"	21.8 / 0.86"
NE3045B	45 / 1.77"	36.8 / 1.45"
NE3080B	80 / 3.14"	71.8 / 2.83"
NE3114B	113.6 / 4.47"	105.4 / 4.15"

NC2023BAS - NC2114BAS

Bodenrahmenprofil
Base Maker Extrusion

NE2023BAS	23mm
NE2030BAS	30mm
NE2045BAS	45mm
NE2060BAS	60mm
NE2080BAS	80mm
NE2114BAS	114mm

Aluminium, Anodized

N-Case 1 Case System

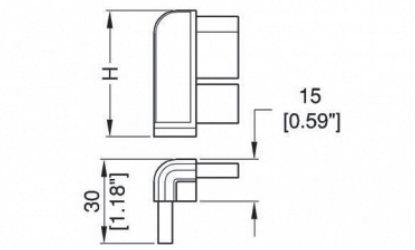

Corner	H
NC2023L	23mm / 0.9"
NC2030L	30mm / 1.18"
NC2045L	45mm / 1.77"
NC2080L	80mm / 3.15"
NC2114L	114mm / 4.49"

NE2023LK - NE3114LK

Ecke für Deckelrahmenprofil

Corner for Lid Maker Extrusion

NC2023LK	23mm
NC2030LK	30mm
NC2045LK	45mm
NC2060LK	60mm
NC2080LK	80mm
NC2114LK	114mm

Plastic, Black

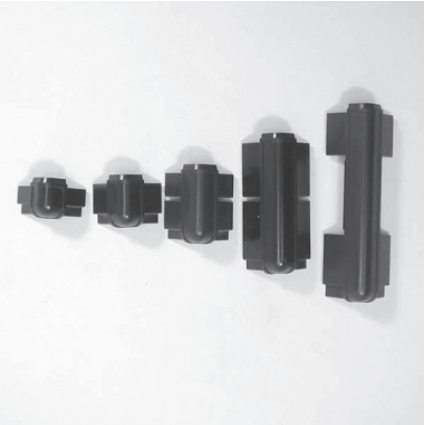

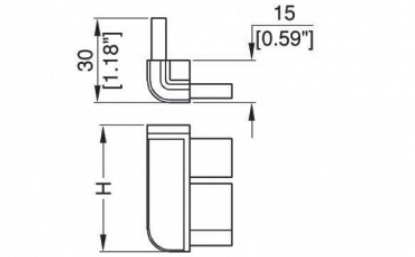

Corner	H
NC2023B	23mm / 0.9"
NC2030B	30mm / 1.18"
NC2045B	45mm / 1.77"
NC2080B	80mm / 3.15"
NC2114B	114mm / 4.49"

NE2023BK - NE3114BK

Ecke für Bodenlrahmenprofil

Corner for Base Maker Extrusion

NC2023BK	23mm
NC2030BK	30mm
NC2045BK	45mm
NC2060BK	60mm
NC2080BK	80mm
NC2114BK	114mm

Plastic, Black

NX-0400 - NX-0600

NX-0400: Kleber, Dossierspitze, 50ml
NX-0600: Kleberpistole
zur befestigung der System-Ecken

NX-0400:
Epoxy Adhesive Two Part Tube 50ml
NX-0600:
Applicator Gun
for use with N-Case Extrusions and Corners

x20050k50s - x20050k50si

x20050k50s: Luan + Folie schwarz
x20050k50si: Luan + Folie silber
Gesamtstärke 5mm (kalibriert) für das N-Case System
x20050k50s: Luan + Foil Black
x20050k50si: Luan + Foil Silver
total thickness sheet is 5mm.

sheet 120x125cm, Black or Silver

Baumaterial - Oberflächen / Laminated Panels

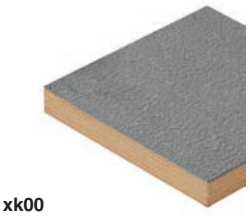
xk00

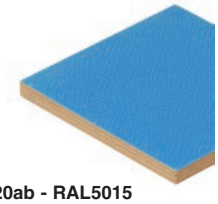
xk20ab - RAL5015

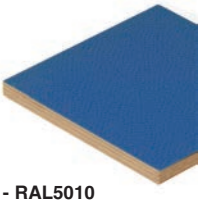
k20b - RAL5010

k20br - RAL8017

k20g - RAL7073

k20nb - RAL5022

k20o - RAL2008

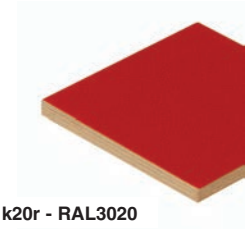
k20r - RAL3020

k20s - RAL9011

k20sg - RAL9011

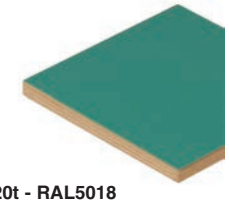
k20t - RAL5018

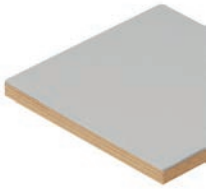
k20w - RAL9010

k20y - RAL1023

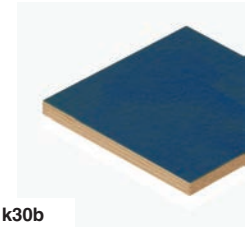
k30b

k30g

k30r

k30s

k50s

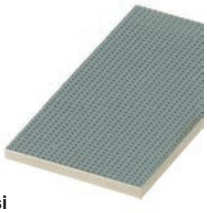
k50si

k01

k00: Aluminium Stucco, 0.4mm, 122x244cm
k20: PVC, 0.3mm
k30: HPL, 0.7mm

k50: N-Case 1 Folie/Foil, 0.4mm
xk01: Rückwandfolie schwarz, 0.165mm
Backing Foil, Black, 0.165mm

x12036k00..... : 3.6mm Luan + Aluminium Stucco
x12036k20..... : 3.6mm Luan + PVC

x20050k50..... : 5.0mm Luan + N-Case 1 Folie/Foil

x1260k00..... : 5.5mm Luan + Aluminium Stucco
x12060k00k01..... : 5.5mm Luan + Aluminium Stucco+ Rückwandfolie/Backing Foil
x12060k20..... : 5.5mm Luan + PVC
x12060k20..k01..... : 5.5mm Luan + PVC + Rückwandfolie/Backing Foil
x12060k30..... : 5.5mm Luan + HPL

x10065k00..... : 6.5mm Birken-MP/Birch + Aluminium Stucco
x10065k00k01..... : 6.5mm Birken-MP/Birch + Aluminium Stucco + Rückwandfolie/Backing Foil
x10065k20..... : 6.5mm Birken-MP/Birch + PVC
x10065k20..k01..... : 6.5mm Birken-MP/Birch + PVC + Rückwandfolie/Backing Foil
x10065k30..... : 6.5mm Birken-MP/Birch + HPL

x10090k00..... : 9.0mm Birken-MP/Birch + Aluminium Stucco
x10090k00k01..... : 9.0mm Birken-MP/Birch + Aluminium Stucco + Rückwandfolie/Backing Foil
x10090k20..... : 9.0mm Birken-MP/Birch + PVC
x10090k20..k01..... : 9.0mm Birken-MP/Birch + PVC + Rückwandfolie/Backing Foil
x10090k30..... : 9.0mm Birken-MP/Birch + HPL
x10090k30.k01..... : 9.0mm Birken-MP/Birch + HPL + Rückwandfolie/Backing Foil

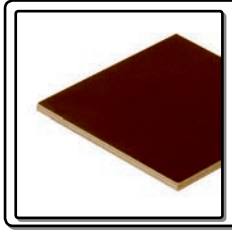

x11065s

Birken-Multiplex-Holz 6.5mm, 2500x1250mm
Phenolharz beschichtet, schwarz/schwarz

Birch Plywood 6.5mm, 2500x1250mm
Black/Black Phenolcoated

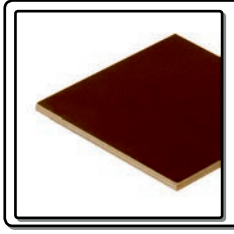

x11090s

Birken-Multiplex-Holz 9mm, 2500x1250mm
Phenolharz beschichtet, schwarz/schwarz

Birch Plywood 9mm, 2500x1250mm
Black/Black Phenolcoated

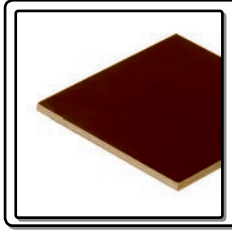

x11120s

Birken-Multiplex-Holz 12mm, 2500x1250mm
Phenolharz beschichtet, schwarz/schwarz

Birch Plywood 12mm, 2500x1250mm
Black/Black Phenolcoated

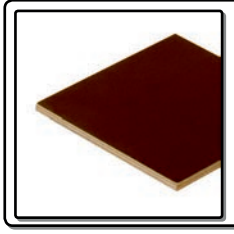

x11150s

Birken-Multiplex-Holz 15mm, 2500x1250mm
Phenolharz beschichtet, schwarz/schwarz

Birch Plywood 15mm, 2500x1250mm
Black/Black Phenolcoated

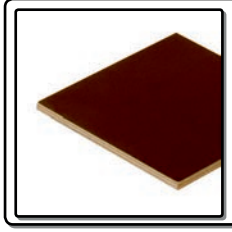

x11180s

Birken-Multiplex-Holz 18mm, 2500x1250mm
Phenolharz beschichtet, schwarz/schwarz

Birch Plywood 18mm, 2500x1250mm
Black/Black Phenolcoated

x11090sD

Birken-Multiplex-Holz 9mm, 2500x1250mm
Phenolharz beschichtet, schwarz/schwarz
Diamond Board
Birch Plywood 9mm, 2500x1250mm
Diamond Board, Black

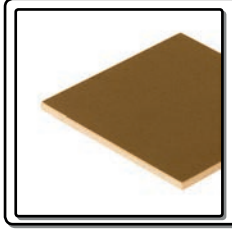

x11065

Birken-Multiplex-Holz 6.5mm, 2500x1250mm
Phenolharz beschichtet, braun/braun

Birch Plywood 6.5mm, 2500x1250mm
Brown/Brown Phenolcoated

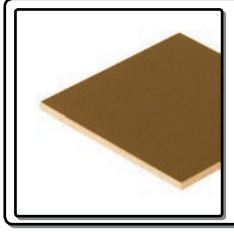

x11090

Birken-Multiplex-Holz 9mm, 2500x1250mm
Phenolharz beschichtet, braun/braun

Birch Plywood 9mm, 2500x1250mm
Brown/Brown Phenolcoated

x10065

Birken-Multiplex-Holz 6.5mm, roh
BB/BB, 2500x1250mm

Birch Plywood 6.5mm, Raw
BB/BB, 2500x1250mm

x10090

Birken-Multiplex-Holz 9mm, roh
BB/BB, 2500x1250mm

Birch Plywood 9mm, Raw
BB/BB, 2500x1250mm

x10120

Birken-Multiplex-Holz 12mm, roh
BB/BB, 2500x1250mm

Birch Plywood 12mm, Raw
BB/BB, 2500x1250mm

x10150

Birken-Multiplex-Holz 15mm, roh
BB/BB, 2500x1250mm

Birch Plywood 15mm, Raw
BB/BB, 2500x1250mm

x10180

Birken-Multiplex-Holz 18mm, roh
BB/BB, 2500x1250mm

Birch Plywood 18mm, Raw
BB/BB, 2500x1250mm

CON-Pearl® - CON-Pearl®

x15046s

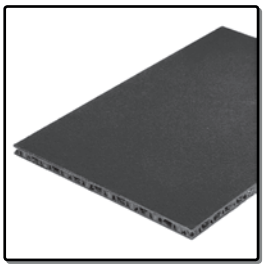

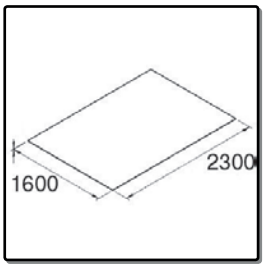

CON-Pearl® 4.6mm, schwarz
160x230cm
CON-Pearl® 4.6mm, Black
160x230cm

PP *1,750 kg/m²* *Black*

x15070b

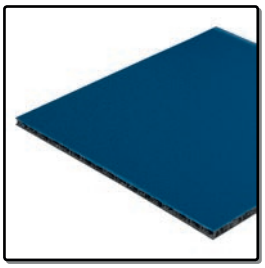

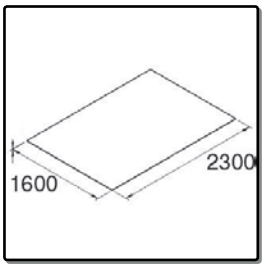

CON-Pearl® 7mm, blau
160x230cm
CON-Pearl® 7mm, Blue
160x230cm

PP *1,750 kg/m²* *Black*

x15070g

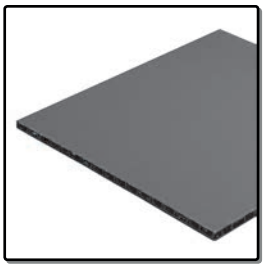

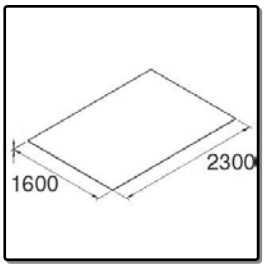

CON-Pearl® 7mm, grau
160x230cm
CON-Pearl® 7mm, Grey
160x230cm

PP *1,750 kg/m²* *Black*

x15070r

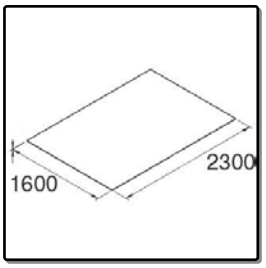

CON-Pearl® 7mm, rot
160x230cm
CON-Pearl® 7mm, Red
160x230cm

PP *1,750 kg/m²* *Black*

x15070s

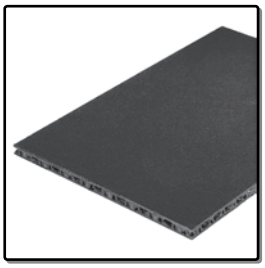

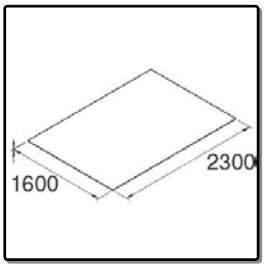

CON-Pearl® 7mm, schwarz
160x230cm
CON-Pearl® 7mm, Black
160x230cm

PP *1,750 kg/m²* *Black*

x15070si

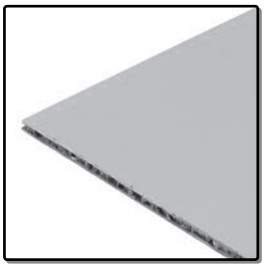

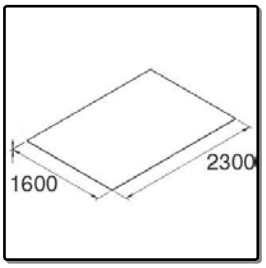

CON-Pearl® 7mm, silber
160x230cm
CON-Pearl® 7mm, Silver
160x230cm

PP *1,750 kg/m²* *Black*

x15100s

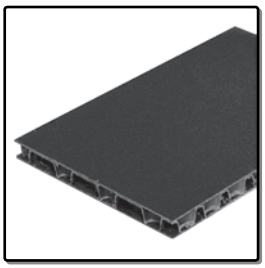

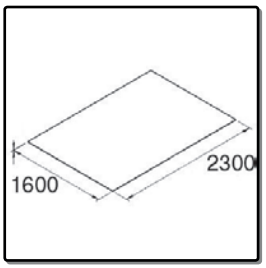

CON-Pearl® 10mm, schwarz
160x230cm
CON-Pearl® 10mm, schwarz
160x230cm

PP *1,750 kg/m²* *Black*

x15110s

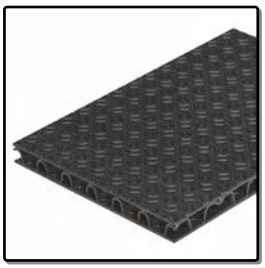

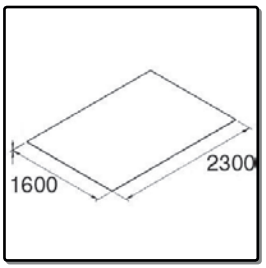

CON-Pearl® HD, 11mm, schwarz
160x230cm
CON-Pearl® HD 11mm, Black
160x230cm

PP *3,650 kg/m²* *Black*

Slam-Lid System

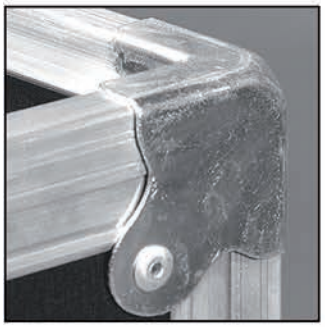

- Uses only these products:

0490	9mm Lid Extrsusion for Slam-Lid-System
2470	Slam Lock
2472	Hook in combination with Slam Lock 2470
C0675/30z	Flat corner made for extrusion 0490
C0675z	Flat Corner
x11090	9mm Birch Plywood, Brown Phenolic
x11090s	9mm Birch Plywood, Black Phenolic

- Save time on manufacturing
- End user Friendly
- Lid requires less storage space when removed

Flight Case & Speaker Cabinet Solutions

Alveobloc

Foam Sheets

Alveobloc foamsheets are designed for the special needs of flightcase manufacturers. They can be used for standard lining and all other applications. The material has a good density and is easy to handle. It can be cut, milled, sawed and even used with a waterjet. Alveobloc sheets come trimmed to 90°, which reduces labour time. The color palette with 13 colors opens up many new design ideas. Alveobloc sheets are available in 10 different thicknesses. The sheet dimension of 200x120cm reduces waste. Sticking with our adhesive xi710-06 guarantees best results.

Schaumstoffplatten

Alveobloc Schaumstoffplatten sind speziell für die Bedürfnisse von Flightcaseherstellern optimiert. Sie eignen sich sowohl für Standardauskleidungen als auch für besondere Lösungen. Das Material hat ein hohes Raumgewicht und ist daher sehr einfach zu handhaben. Es kann geschnitten, gefräst, gesägt oder sogar im Wasserstrahlverfahren bearbeitet werden. Alveobloc Platten werden bereits besäumt geliefert, wodurch sich die Verarbeitungszeit erheblich verringert. Die Farbpalette mit 13 lieferbaren Farben eröffnet viele neue Designmöglichkeiten. Alveobloc-Platten sind in 10 verschiedenen Stärken erhältlich. Die Plattenmaße von 200x120cm verringern die Verschnittmenge erheblich. Das Verarbeiten mit unserem Kleber xi710-06 garantiert beste Ergebnisse.

Specifications:

No.	Thickness
8005	5 mm
8010	10 mm
8015	15 mm
8018	18 mm
8020	20 mm
8030	30 mm
8040	40 mm
8050	50 mm
8080	80 mm
8099	100 mm
Nr.	Stärke

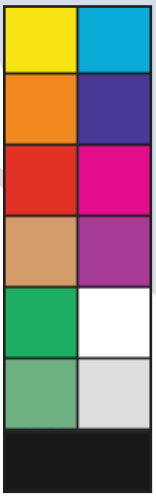

Colors/Farben

Perfect for:
Standard lining and milling
Dimensions: 200x120cm
Weight: 28kg/m³
Trimmed 90°
Black - stock
Colors: 14 days

Anwendungsbereich:
Standardauskleidung und Formgebung
Plattenmaß: 200x120cm
Gewicht: 28kg/m³
Besäumt 90°
Schwarz ab Lager
Farben: Lieferzeit 14 Tage

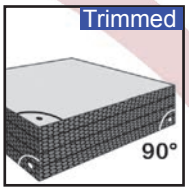

Related Products - Zusatzprodukte

Glue for Foam
Kontaktklebstoff

Spray Gun
Sprühpistole

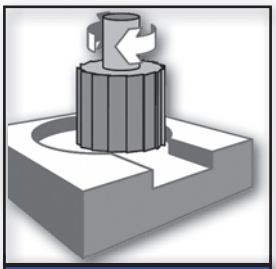
Milling - Fräsen

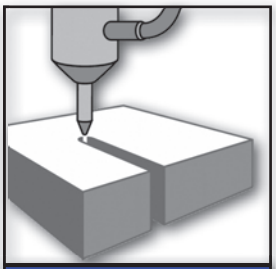
Watercut

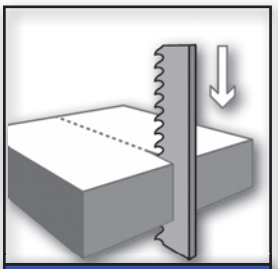
Sawing - Sägen

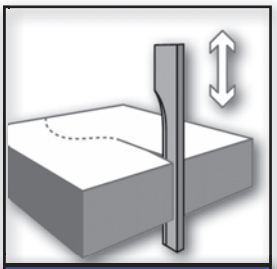
Plotting - Plotten

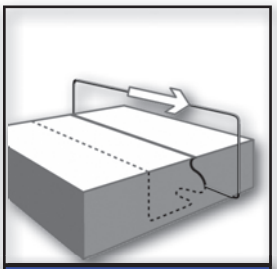
Contour Cutting

PENN ELCOM GMBH - DECHANT-SPRÜNKEN-STR. 49B - DE-46446 EMMERICH
Phone: +49 2822 91303 3 - Fax: +49 2822 91303 50 Mail: post.eu@penn-elcom.com
HARDWARE PRODUCTS AND GROUP: www.penn-elcom.com

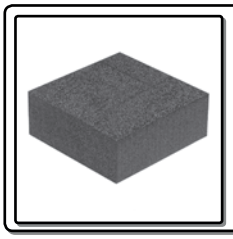

8005

ALVEOBloc® / Penn-Elcom 5mm
120x200cm
28kg/m³

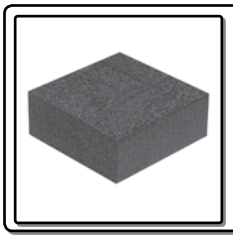

8010

ALVEOBloc® / Penn-Elcom 10mm
120x200cm
28kg/m³

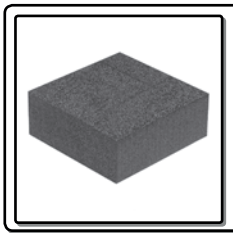

8015

ALVEOBloc® / Penn-Elcom 15mm
120x200cm
28kg/m³

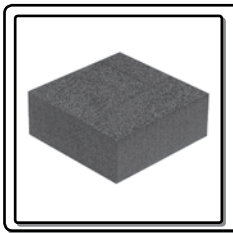

8018

ALVEOBloc® / Penn-Elcom 18mm
120x200cm
28kg/m³

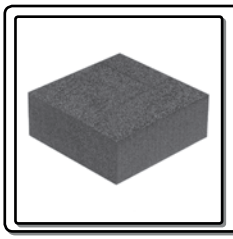

8020

ALVEOBloc® / Penn-Elcom 20mm
120x200cm
28kg/m³

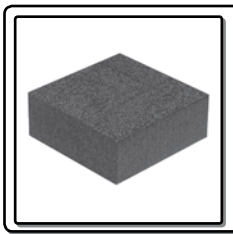

8030

ALVEOBloc® / Penn-Elcom 30mm
120x200cm
28kg/m³

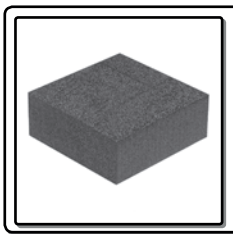

8040

ALVEOBloc® / Penn-Elcom 40mm
120x200cm
28kg/m³

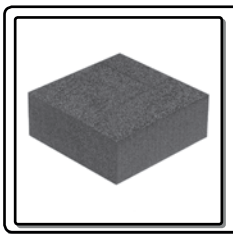

8050

ALVEOBloc® / Penn-Elcom 50mm
120x200cm
28kg/m³

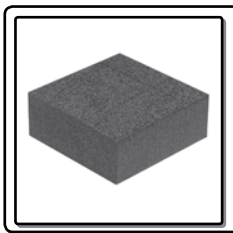

8060

ALVEOBloc® / Penn-Elcom 60mm
120x200cm
28kg/m³

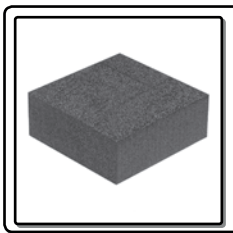

8080

ALVEOBloc® / Penn-Elcom 80mm
120x200cm
28kg/m³

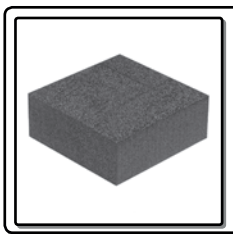

8090

ALVEOBloc® / Penn-Elcom 90mm
120x200cm
28kg/m³

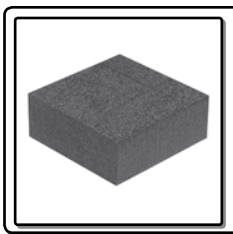

8099

ALVEOBloc® / Penn-Elcom 100mm
120x200cm
28kg/m³

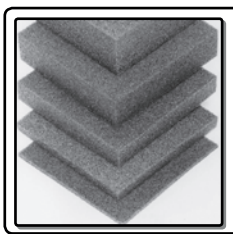

8105

Ethafoam 5mm
60x200cm

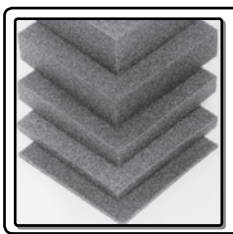

8110

Ethafoam® 10mm
60x200cm

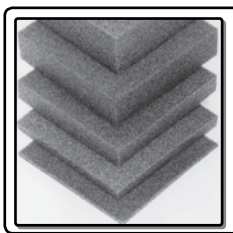

8115

Ethafoam® 15mm
60x200cm

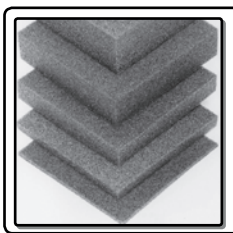

8120

Ethafoam® 20mm
60x200cm

Schaumstoff - Foam

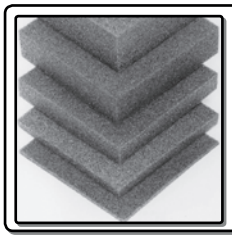

8130

Ethafoam® 30mm
60x200cm

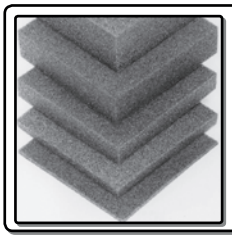

8140

Ethafoam® 40mm
60x200cm

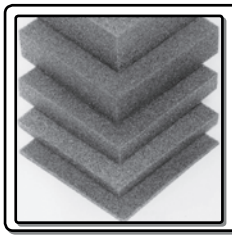

8150

Ethafoam® 50mm
60x200cm

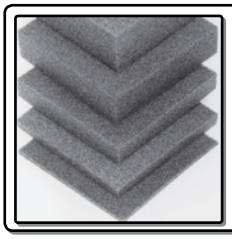

8180

Ethafoam® 80mm
60x200cm

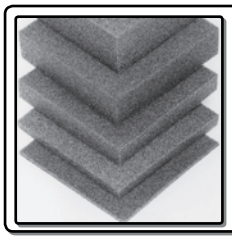

8199

Ethafoam® 100mm
60x200cm

8510

Weichschaumstoff 10mm
100x200cm

Soft Foam 10mm
100x200cm

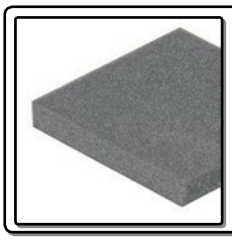

8515

Weichschaumstoff 15mm
100x200cm

Soft Foam 15mm
100x200cm

8520

Weichschaumstoff 20mm
100x200cm

Soft Foam 20mm
100x200cm

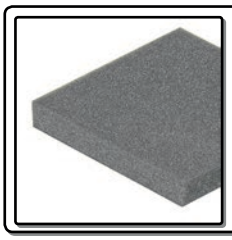

8530

Weichschaumstoff 30mm
100x200cm

Soft Foam 30mm
100x200cm

8540

Weichschaumstoff 40mm
100x200cm

Soft Foam 40mm
100x200cm

8550

Weichschaumstoff 50mm
100x200cm

Soft Foam 50mm
100x200cm

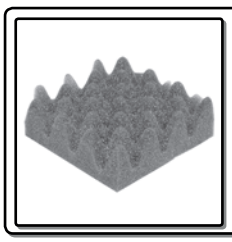

8820

Noppenschaumstoff 20mm
100x200cm

Egg Carton Foam 20mm
100x200cm

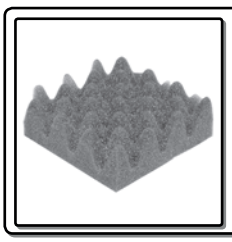

8830

Noppenschaumstoff 30mm
100x200cm

Egg Carton Foam 30mm
100x200cm

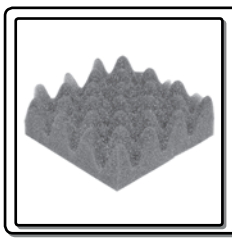

8840

Noppenschaumstoff 40mm
100x200cm

Egg Carton Foam 40mm
100x200cm

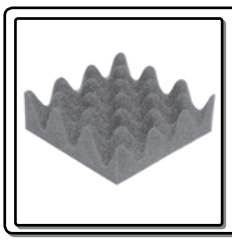

8850

Noppenschaumstoff 50mm
100x200cm

Egg Carton Foam 50mm
100x200cm

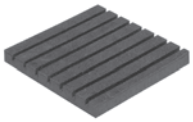

8710G

Plastazon 10mm, genutet (4mm-Nuten)
zu Kunstroffplatte x15030s

10mm Grooved Hard Foam, Groove 4mm
Fits 4mm Sheet x15030s

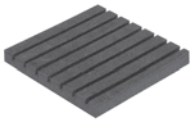

8715G

Plastazon 15mm, genutet (6.5mm-Nuten)
zu 6.5mm Multiplex-Holz

15mm Grooved Hard Foam, Groove 6.5mm
Fits 6.5mm Wood

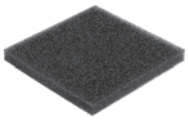

8305

Lautsprecherfrontschaum 5mm
100x200cm

Speaker Front Foam 5mm
100x200cm

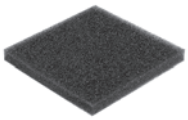

8310

Lautsprecherfrontschaum 10mm
100x200cm

Speaker Front Foam 10mm
100x200cm

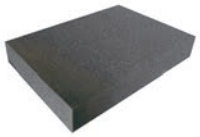

8254

Rasterschaumeinsatz
585x385x80mm

Raster Foam Insert
585x385x80mm

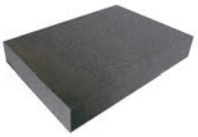

8253

Rasterschaumeinsatz
450x310x70mm

Raster Foam Insert
450x310x70mm

8208

Einsatz für 7 Mikrofone
320x430mm

Inlay for 7 Microphones
320x430mm

xi710-06

Kontaktklebstoff für Schaumstoff, 6L.

Glue for Foam on Plywood, 6 Liter

M6900

Sprühkleber für Schaumstoff, à 500ml
reicht für 5-6m²

Spray Adhesive for Foam and Carpet 500ml
enough for 5-6m²

xi711

Sprühpistole für Kleber und Lacke

Professional Spray Gun for Glue + Paint

Plywood/Con-Pearl® > Extrusion Guide

Welche Profilen passen zu den Holz- oder CON-Pearl® Stärken?.
Diese Anleitung soll Ihnen helfen

Which Extrusion fit on the Plywood or CON-Pearl® you have chosen? This Guide will help you

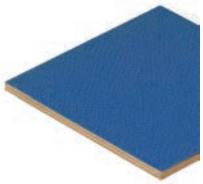

Baumaterial Laminated Panels		*Verschlusskante* M/F Hybrid Location		*Casemaker* Casemaker	*Deckelrahmen* Lid-/Basemaker
x12036k00	3.6mm Luan + Aluminium Stucco	0315		0151	0400
x12036k20..	3.6mm Luan + PVC				0415
x20050k50.	5.0mm Luan + N-Case 1 Folie/Foil				n-case 1
x1260k00.	5.5mm Luan + Aluminium Stucco	0303		0154	0405
x12060k00k01	5.5mm Luan + Aluminium Stucco+ k01	0320			
x12060k20..	5.5mm Luan + PVC				
x12060k20..k01	5.5mm Luan + PVC + k01				
x12060k30.	5.5mm Luan + HPL				
x11065	6.5mm Birken-MP/Birch, Phenolcoated Brown	0300		0152	0425
x11065s	6.5mm Birken-MP/Birch, Phenolcoated Black	0305		0153	0445
x10065k20..	6.5mm Birken-MP/Birch + PVC	0310			
x10065k20..k01	6.5mm Birken-MP/Birch + PVC + k01				
x1006500	6.5mm Birken-MP/Birch + Aluminium Stucco	0300		0152	0425
x10065k00k01	6.5mm Birken-MP/Birch + Al. Stucco + k01	0310		0153	0445
x10065k30.	6.5mm Birken-MP/Birch + HPL	0320			
		E0850			
x11090	9.0mm Birken-MP/Birch, Phenolcoated Brown	0500		0170	0470
x11090s	9.0mm Birken-MP/Birch, Phenolcoated Black	0581			
x10090k00..	9.0mm Birken-MP/Birch + Aluminium Stucco				
x10090k00k01	9.0mm Birken-MP/Birch + Al. Stucco + k01				
x10090k20..	9.0mm Birken-MP/Birch + PVC				
x10090k20..k01	9.0mm Birken-MP/Birch + PVC + k01				
x10090k30.	9.0mm Birken-MP/Birch + HPL	0520	0521	0162	0450
		0522	0523	0166	0452
		0524	0591		0455
x15046s	4.6mm CON-Pearl®				n-case 1
x15070..	7.0mm CON-Pearl®	0301	0310	0156	n-case 2
		n-case 2		n-case 2	
x15100s	10.0mm CON-Pearl®	0520	0521	0162	0450
		0522	0523	0166	0452
		0524	0591		0455
x15110s	11.0mm CON-Pearl®	E2375		E2255	

Profile R2 - Extrusions R2

0121

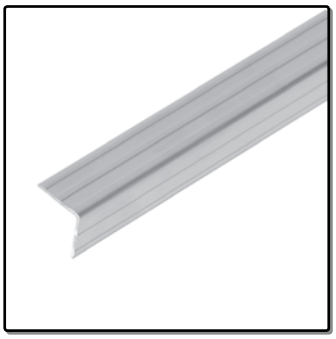

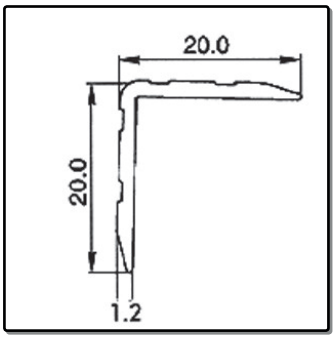

Kantenschutzprofil 20x20x1.2

Case Angle 20x20x1.2mm

Aluminium *0.095 kg/m* *Aluminium*

0122

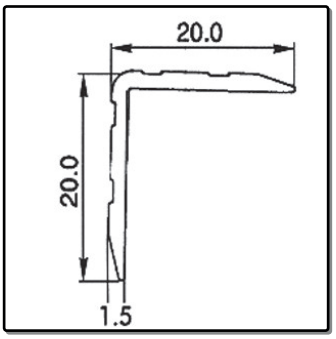

Kantenschutzprofil 20x20x1.5

Case Angle 20x20x1.5mm

Aluminium *0,138 kg/m* *Aluminium or Anodized*

0125

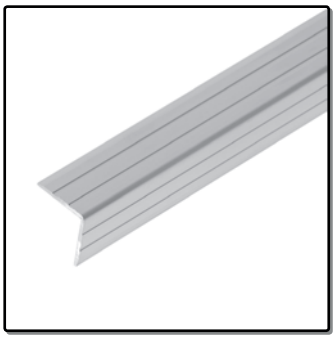

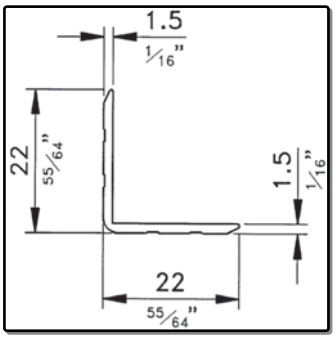

Kantenschutzprofil 22x22x1.5

Case Angle 22x22x1.5mm

Aluminium *0,143 kg/m* *Aluminium or Anodized*

0126

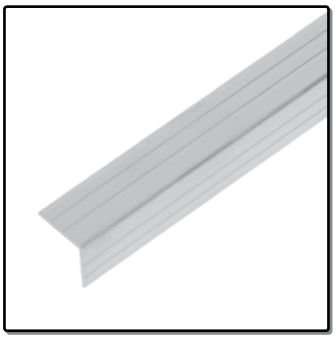

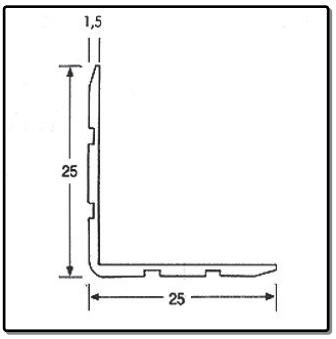

Kantenschutzprofil 25x25x1.5

Case Angle 25x25x1.5mm

Aluminium *0,167 kg/m* *Aluminium or Anodized*

0130

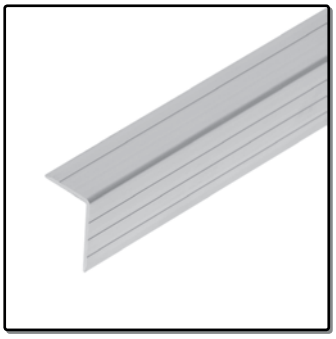

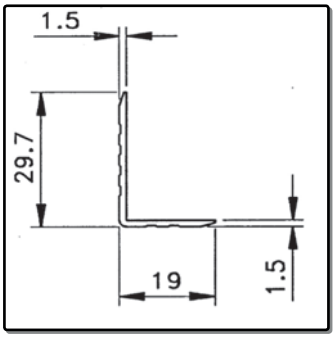

Kantenschutzprofil 30x20x1.5

Case Angle 30x20x1.5mm

Aluminium *0.160 kg/m* *Aluminium*

0100

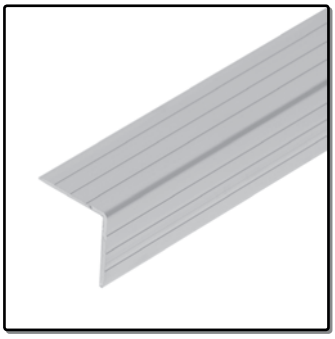

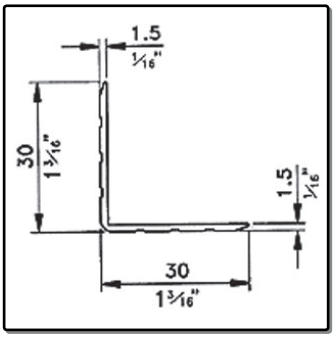

Kantenschutzprofil 30x30x1.5

Case Angle 30x30x1.5mm

Aluminium *0,208 kg/m* *Aluminium or Anodized*

0113

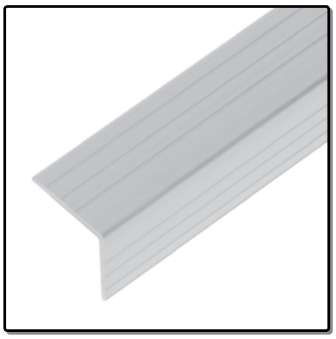

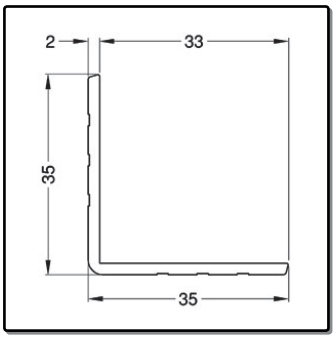

Kantenschutzprofil 35x35x2

Case Angle 35x35x2mm

Aluminium *0,351 kg/m* *Aluminium*

0151

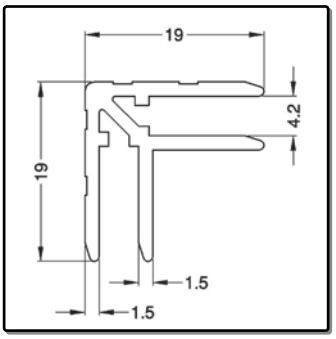

Casemaker, Einschub 4mm, 20x20x1.5

Casemaker for 4mm, 20x20x1.5mm

Aluminium *0,232 kg/m* *Aluminium or Anodized*

0152

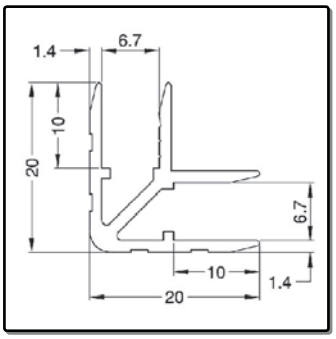

Casemaker, Einschub 6.7mm, 20x20x1.5

Casemaker for 6.7mm, 20x20x1.5mm

Aluminium *0,246 kg/m* *Aluminium*

0153

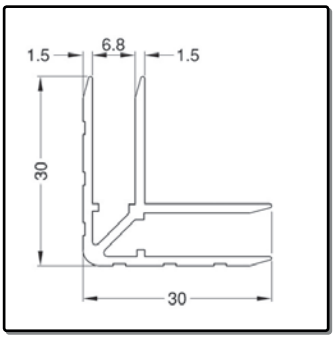

Casemaker, Einschub 6.8mm, 30x30x1.5

Casemaker for 6.8mm, 30x30x1.5mm

Aluminium *0,444 kg/m* *Aluminium*

0156

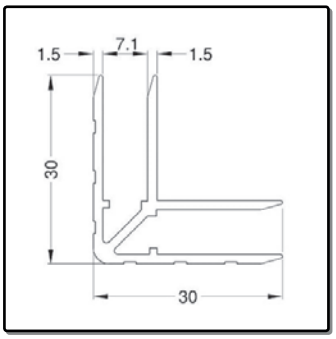

Casemaker, Einschub 7.1mm, 30x30x1.5

Casemaker for 7.1mm, 30x30x1.5mm

Aluminium *0,455 kg/m* *Aluminium*

0170

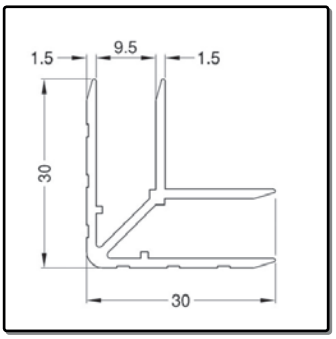

Casemaker, Einschub 9.5mm, 30x30x1.5

Casemaker for 9.5mm, 30x30x1.5mm

Aluminium *0,435 kg/m* *Aluminium*

Profile R2 - Extrusions R2

0162

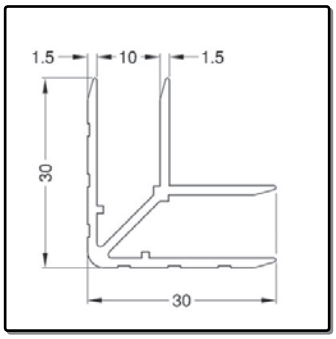

Casemaker, Einschub 10mm, 30x30x1.5

Casemaker for 10mm, 30x30x1.5mm

Aluminium *0,465 kg/m* *Aluminium*

E2255

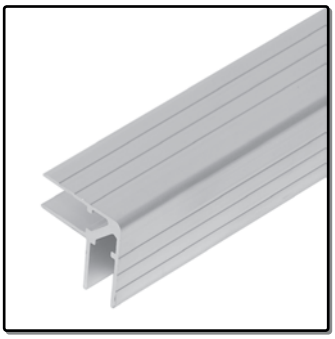

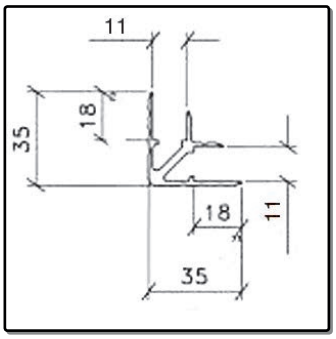

Casemaker, Einschub 11mm, 35x35x1.5

Casemaker for 11mm, 35x35x1.5mm

Aluminium *0,609 kg/m* *Aluminium*

0400

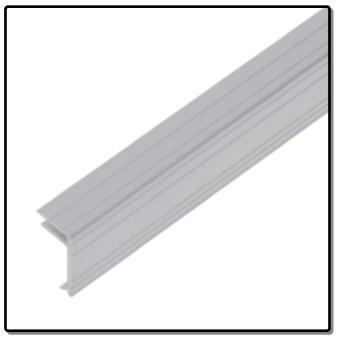

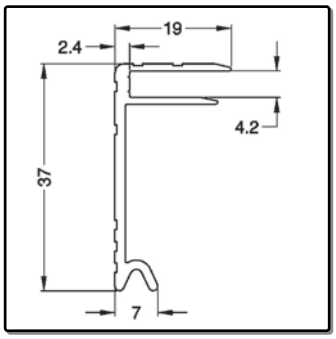

Rahmenprofil 4mm, 37x20x2.5
passend zu 0315/1

Lid-/Basemaker 4mm, 37x20x2.5mm
Fits 0315/1

Aluminium *0,306 kg/m* *Aluminium or Anodized*

0415

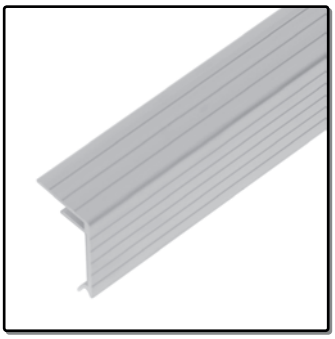

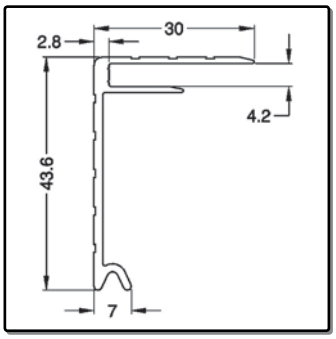

Rahmenprofil 4mm, 43x30x3.0
passend zu 0315/1

Lid-/Basemaker 4mm, 43x30x3mm
Fits 0315/1

Aluminium *0,426 kg/m* *Aluminium*

0405

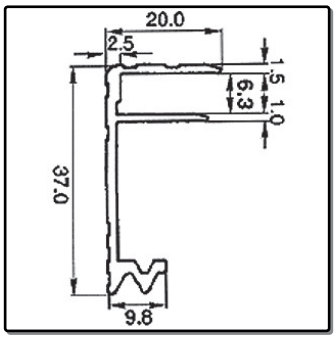

Rahmenprofil 6.3mm, 37x20x2.5
passend zu 0300

Lid-/Basemaker 6.3mm, 37x20x2.5mm
Fits 0300

Aluminium *0.335 kg/m* *Aluminium*

0425

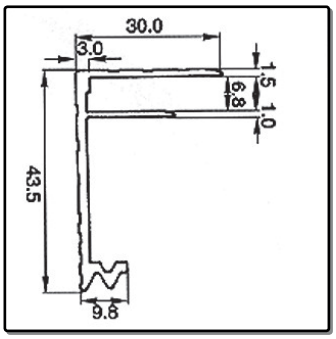

Rahmenprofil 6.8mm, 43x30x3.0
passend zu 0300

Lid-/Basemaker 6.8mm, 43x30x3.0mm
Fits 0300

Aluminium *0,456 kg/m* *Aluminium*

0445

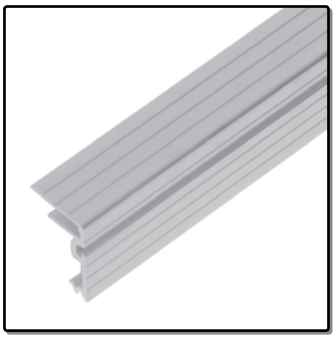

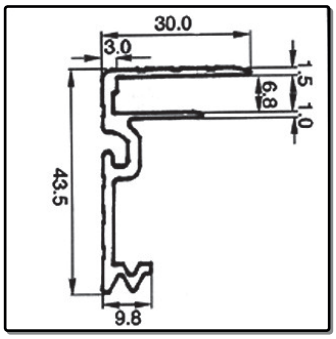

Rahmenprofil 6.8mm, 43x30x3.0, Einhaknut
passend zu 0300

Lid-/Basemaker 6.8mm, Groove for Locks
Fits 0300

Aluminium *0,543 kg/m* *Aluminium*

0470

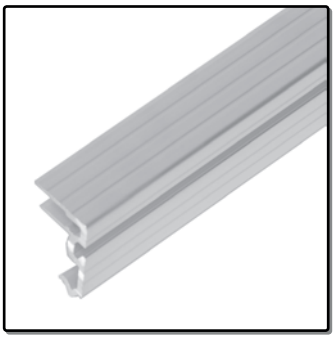

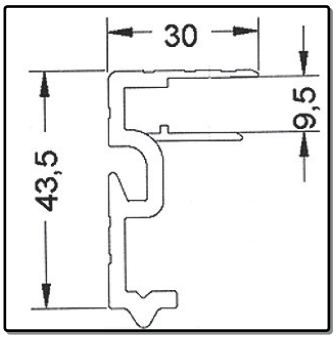

Rahmenprofil male, 9.5mm, Einhaknut
passend zu 0500/2

Lid-/Basemaker Male 9.5mm
Groove for Locks
Fits 0500/2

Aluminium *0,794 kg/m* *Aluminium*

0450

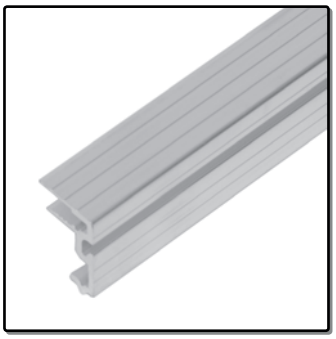

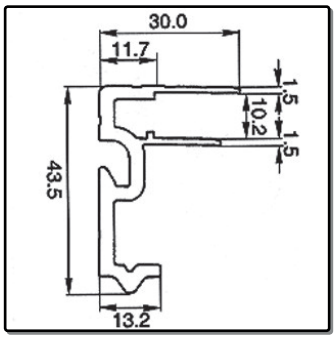

Rahmenprofil 10.2mm, Einhaknut
passend zu 0520/2

Lid-/Basemaker Male, 10.2mm
Groove for Locks
Fits 0520/2

Aluminium *0,786 kg/m* *Aluminium*

0455

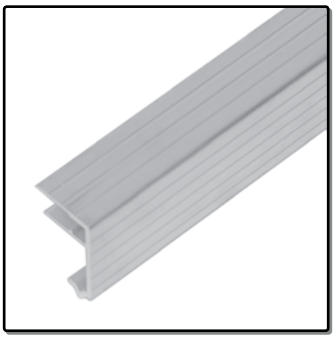

Rahmenprofil 10.2mm, 43.5x30mm
passen zu Rahmenprofil 0450 + 0452
und Schließprofil 0520/2
Lid-/Basemaker 10.2mm, 43.5x30mm
use with Extrusion 0450 + 0452
Female Extrusion 0520/2

Aluminium *0.780 kg/m* *Aluminium*

0452

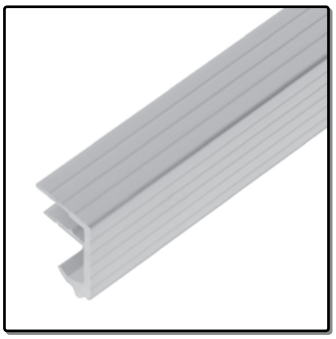

Rahmenprofil 10.2mm, 43.5x30mm
mit Schließhaken, passend zu L0930
und Schließprofil 0520/2
Lid-/Basemaker 10.2mm, 43.5x30mm
Integral keep for Smartlatch L0930
Fit Female Extrusion 0520/2

Aluminium *0.780 kg/m* *Aluminium*

Profile R5 - Extrusions R5

0105

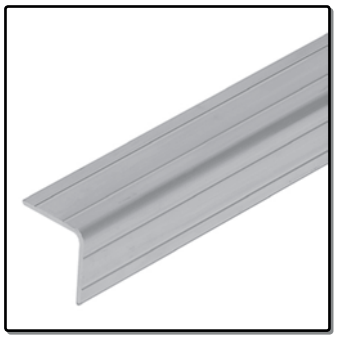

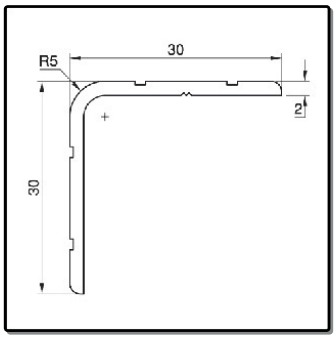

Kantenschutzprofil 30x30x2.0

Case Angle 30x30x2mm

Aluminium *0,293 kg/m* *Aluminium*

0106

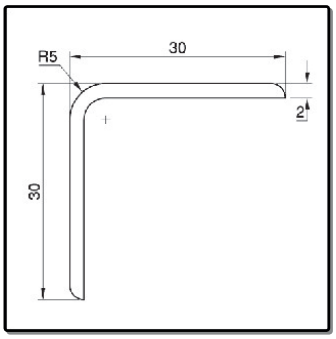

Kantenschutzprofil 30x30x2.0, glatt

Case Angle 30x30x2mm

Aluminium *0,300 kg/m* *Aluminium*

0112

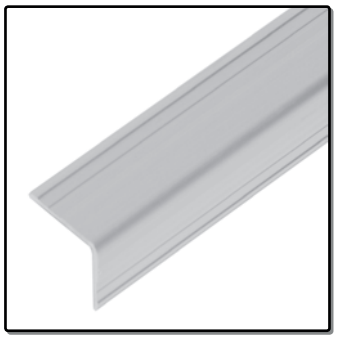

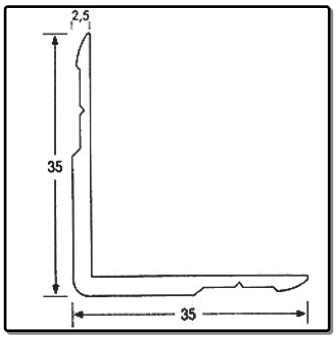

Kantenschutzprofil 35x35x2.5
Außenradius 5mm

Case Angle 35x35x2.5mm
Radius 5mm Outside, Sharp Inside

Aluminium *0,332 kg/m* *Aluminium or Anodized*

0154

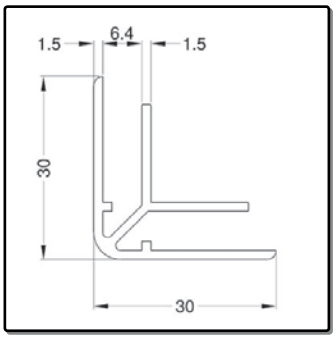

Casemaker, Einschub 6.4mm, 30x30x1.5

Casemaker for 6.4mm, 20x20x1.5mm

Aluminium *0,390 kg/m* *Aluminium*

0166

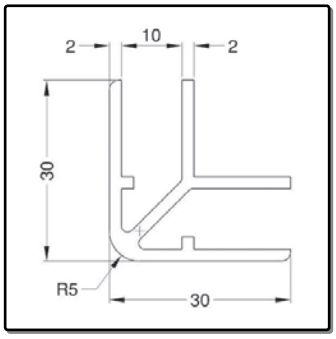

Casemaker, Einschub 10mm, 30x30x2.0

Casemaker for 10mm, 30x30x2mm

Aluminium *0,596 kg/m* *Aluminium*

E4007

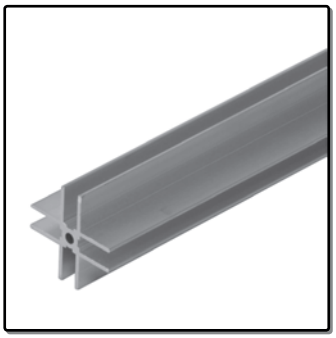

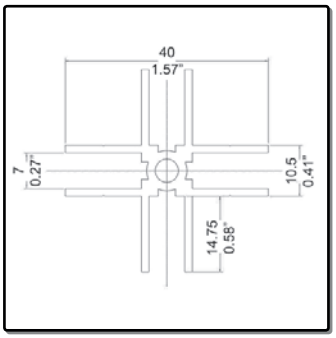

Trennwandprofil 7mm

4 Way Divider Extrusion 7mm

Aluminium *0,197 kg/m* *Aluminium*

E4009

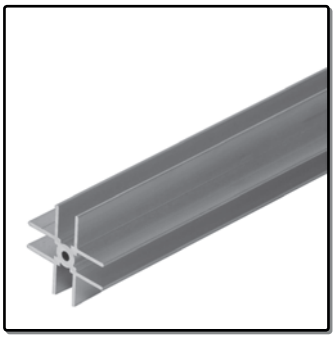

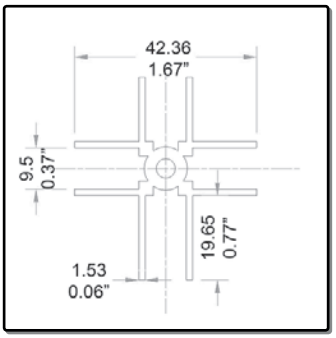

Trennwandprofil 9.5mm

4 Way Divider Extrusion 9.5mm

Aluminium *0,197 kg/m* *Aluminium*

0600

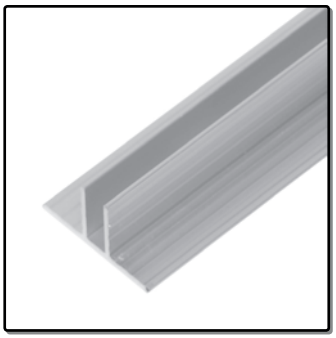

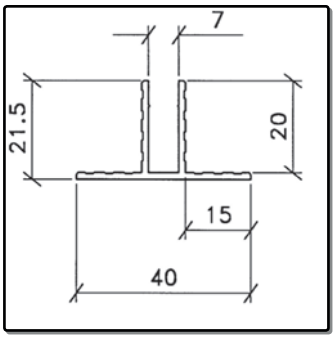

Trennwandeinschubprofil 7mm

Case Divider Extrusion for 7mm

Aluminium *0,310 kg/m* *Aluminium*

E2226

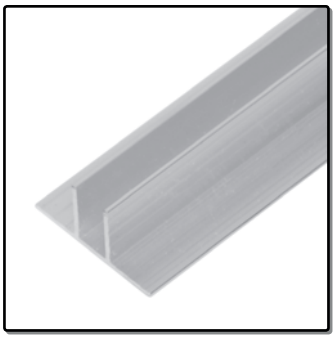

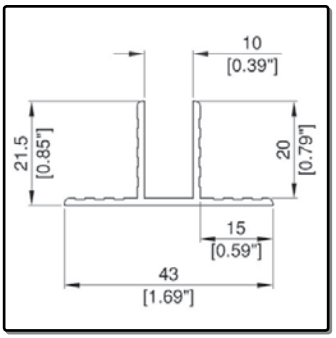

Trennwandeinschubprofil 10mm

Case Divider Extrusion for 10mm

Aluminium *0,322 kg/m* *Aluminium*

0650

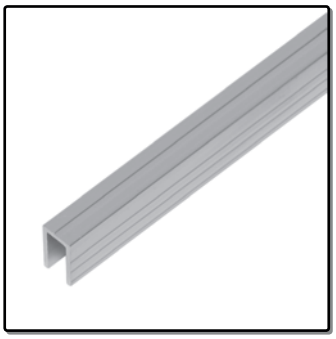

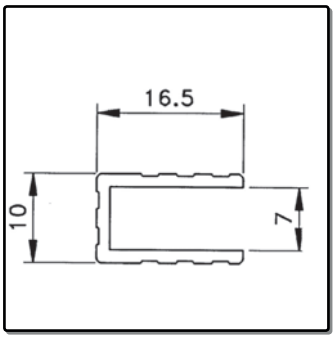

U-Profil, 7mm Aufnahme

U-Extrusion for 7mm

Aluminium *0,155 kg/m* *Aluminium*

0655

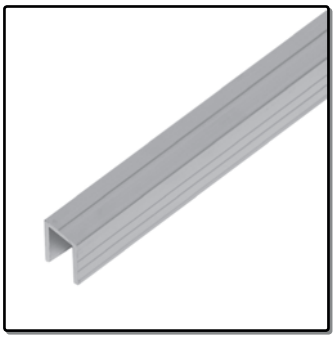

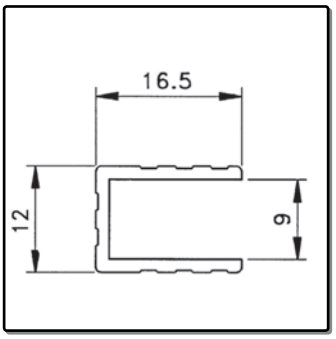

U-Profil, 9mm Aufnahme

U-Extrusion for 9mm

Aluminium *0,163 kg/m* *Aluminium*

0620

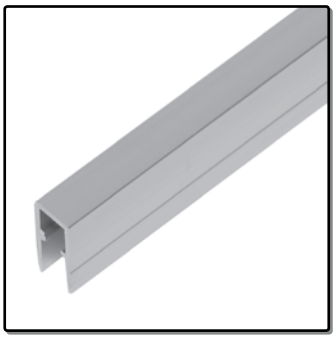

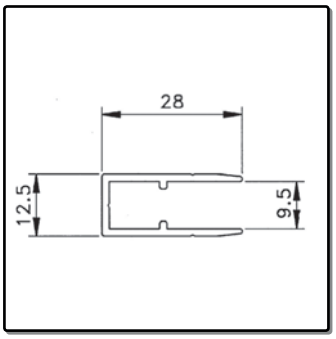

Trennwand- und U-Profil, 9.5mm

Trim U Shape for 9.5mm

Aluminium *0,283 kg/m* *Aluminium*

0658

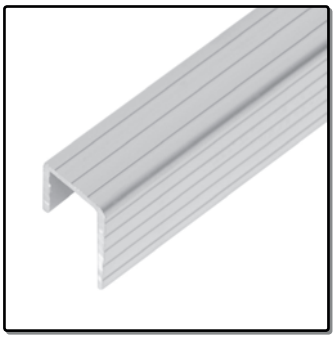

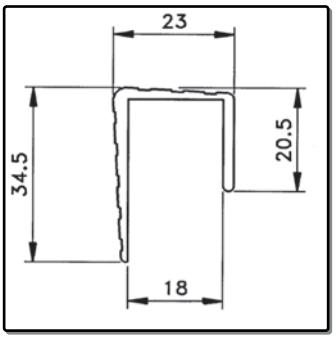

U-Profil, 18mm Aufnahme

U-Extrusion for 18mm

Aluminium *0,366 kg/m* *Aluminium*

0611

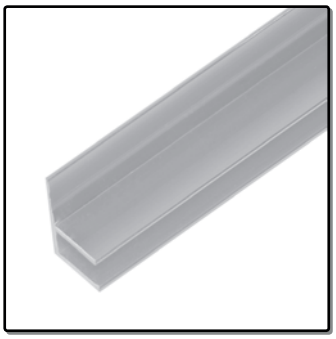

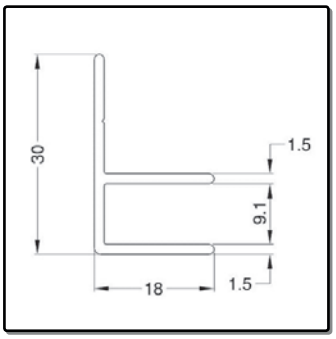

F-Trennwandeinschubprofil 9.1mm

Case Divider Extrusion for 9.1mm

Aluminium *0,260 kg/m* *Aluminium*

0631

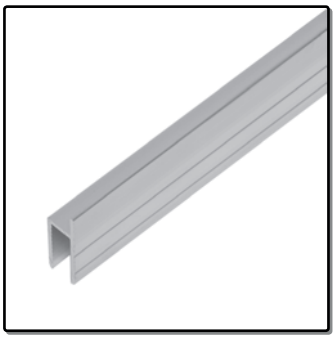

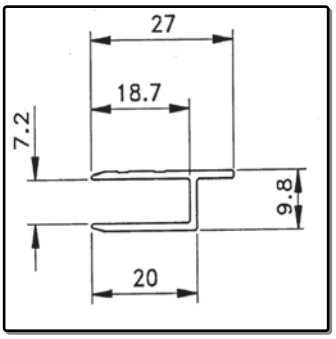

h-Profil, 7.3mm Aufnahme

h-Extrusion for 7.3mm

Aluminium *0,181 kg/m* *Aluminium*

0632

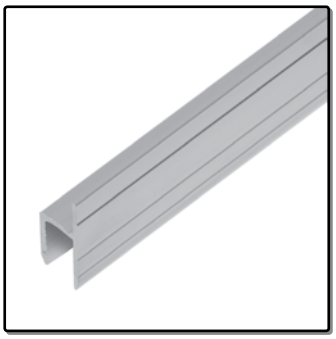

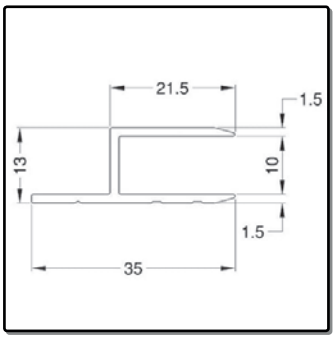

h-Profil, 10mm Aufnahme

h-Extrusion for 10mm

Aluminium *0,265 kg/m* *Aluminium*

0640

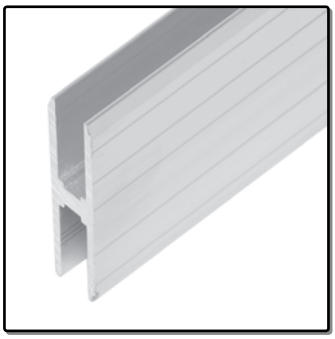

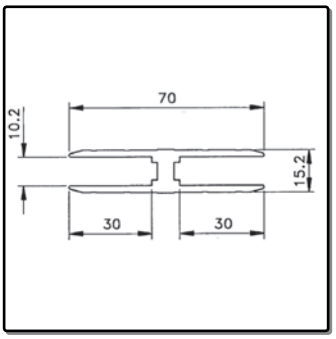

H-Profil, 10.2mm Aufnahme

H-Extrusion for 10.2mm

Aluminium *1,112 kg/m* *Aluminium*

E2207 - E2212

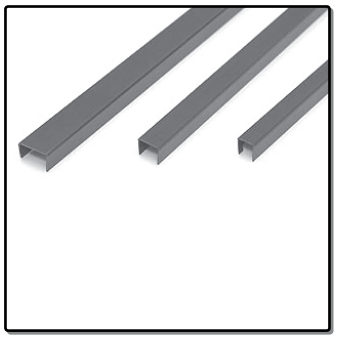

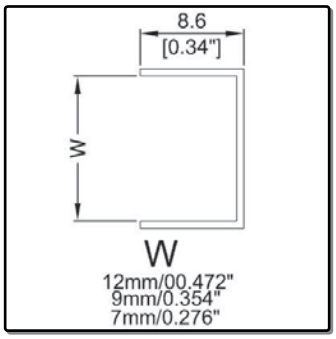

U-Profile flach, 7, 9 und 12mm Aufnahme
Flach-Versionen

Flat U-Extrusions for 7, 9 and 12mm

PVC *0,009 kg/m* *Black*

0490

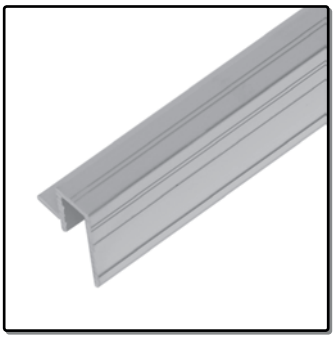

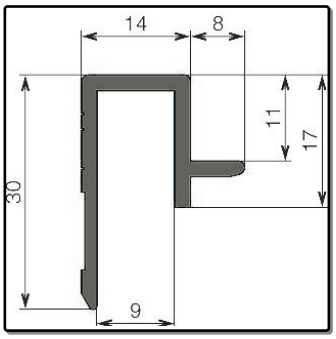

Slam-Lid-Rahmenprofil, 9mm

Extrusion for Slam Lid System, 9mm

Aluminium *0,309 kg/m* *Aluminium*

Schließprofil - Lid Location

0315

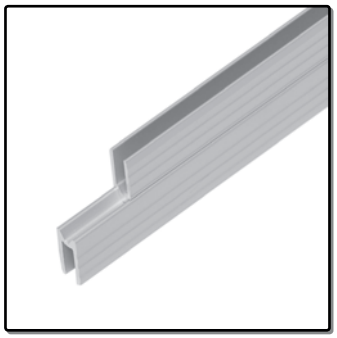

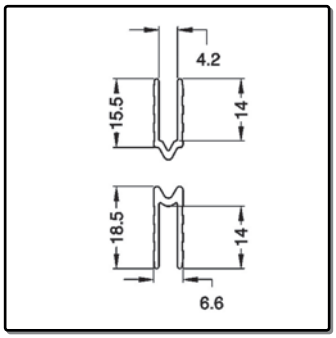

Schließprofil male/female, 4mm

Male + Female Lid Location for 4mm

Aluminium *0,306 kg/m* *Aluminium*

0303

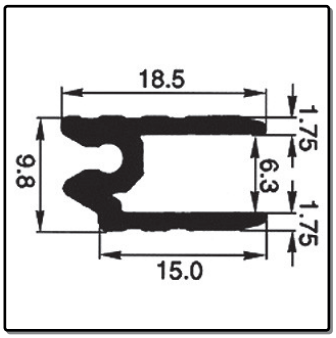

Schließprofil hybrid, 6.3mm, Kederrinne

Hybrid Lid Location for 6.3mm

Aluminium *0,202 kg/m* *Aluminium or Anodized*

0320

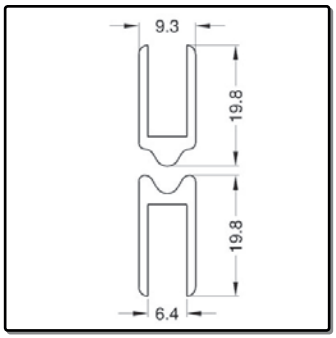

Schließprofil male/female 6.4mm, glatt

Male + Female Lid Location for 6.4mm

Aluminium *0,420 kg/m* *Aluminium*

0305

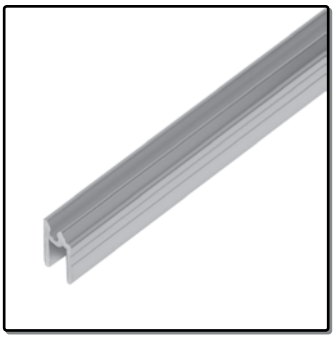

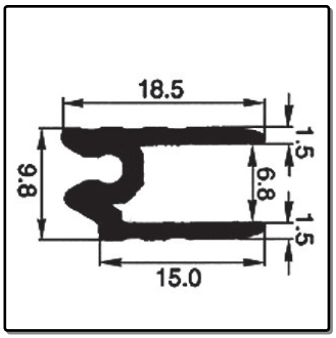

Schließprofil hybrid, 6.8mm, Kederrinne

Hybrid Lid Location for 6.8mm
Groove

Aluminium *0,189 kg/m* *Aluminium*

0300

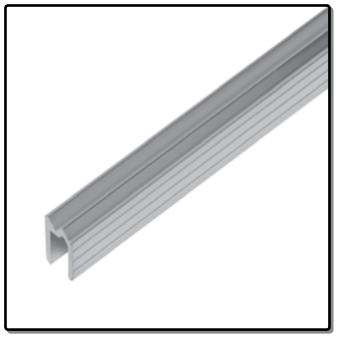

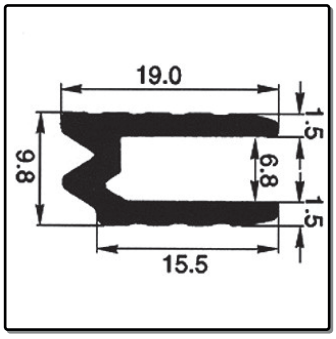

Schließprofil hybrid, 6.8mm
Biegequalität

Hybrid Lid Location for 6.8mm

Aluminium *0,184 kg/m* *Aluminium or Anodized*

0310

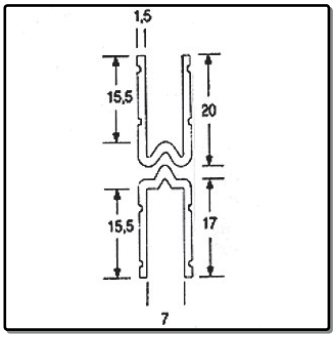

Schließprofil male/female, 7mm

Male + Female Lid Location for 7mm

Aluminium *0.380 kg/m* *Aluminium or Anodized*

0301

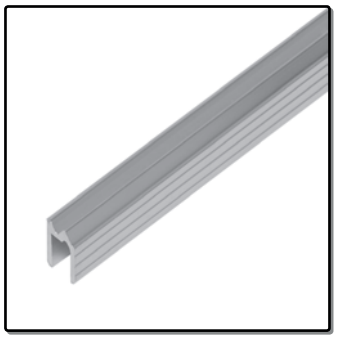

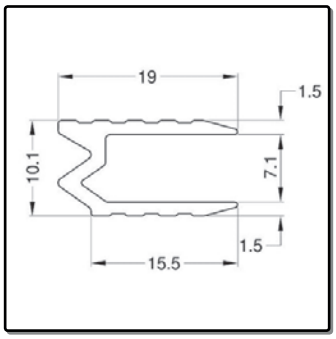

Schließprofil hybrid, 7.1mm
Biegequalität

Hybrid Lid Location for 7.1mm

Aluminium *0,194 kg/m* *Aluminium*

0321

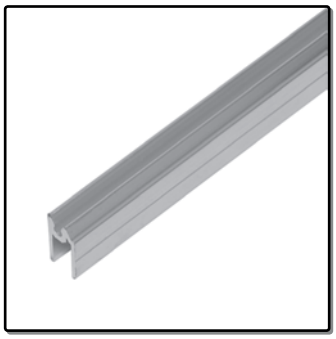

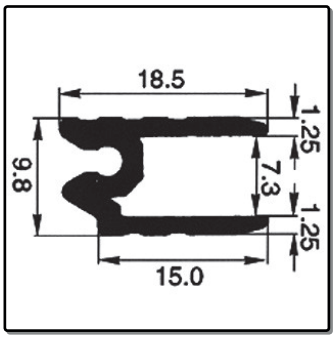

Schließprofil hybrid, 7.3mm, Kederrinne

Hybrid Lid Location for 7.3mm
Groove

Aluminium *0.180 kg/m* *Aluminium*

E0850

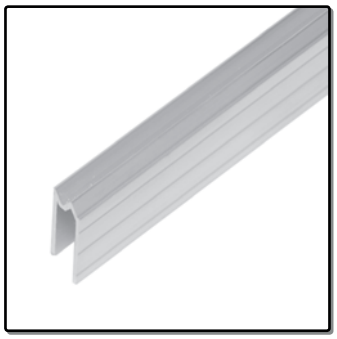

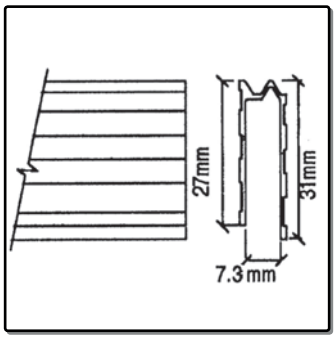

Schließprofil hybrid, 7.3mm

Hybrid Lid Location for 7.3mm

Aluminium *0,225 kg/m* *Aluminium*

0500

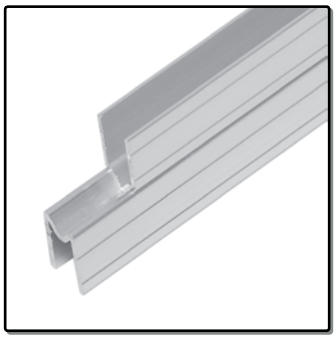

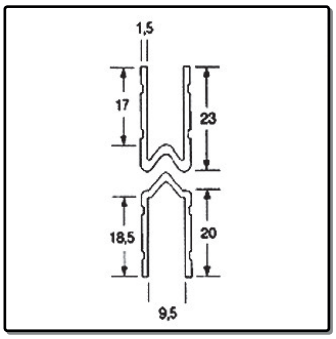

Schließprofil male/female, 9.5mm

Male + Female Lid Location 9.5mm

Aluminium *0.420 kg/m* *Aluminium*

0581

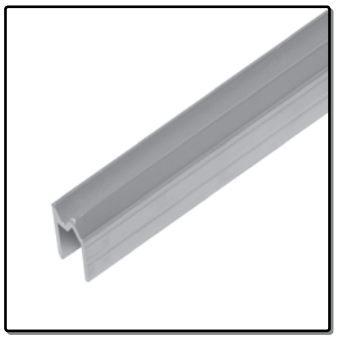

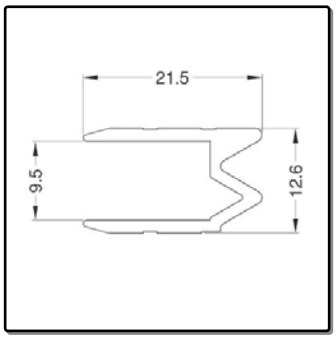

Schließprofil hybrid, 9.5mm

Hybrid Lid Location for 9.5mm

Aluminium *0,225 kg/m* *Aluminium*

0591

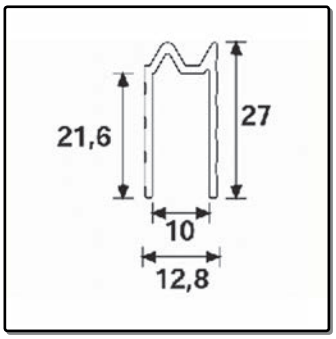

Schließprofil hybrid, 10mm

Hybrid Lid Location for 10mm

0,235 kg/m *Aluminium*

Schließprofil - Lid Location

0521

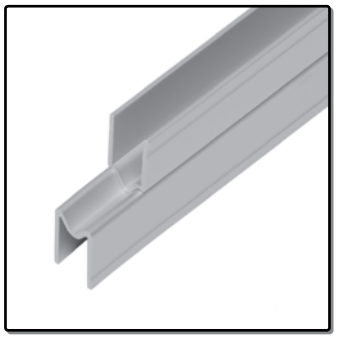

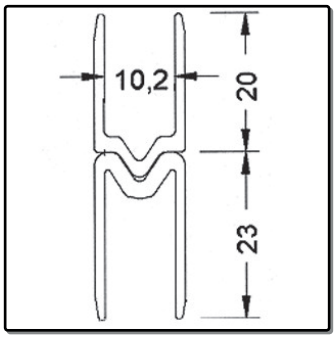

Schließprofil male/female 10.2mm

Male + Female Lid Location 10.2mm

Aluminium *0,429 kg/m* *Aluminium or Anodized*

0522

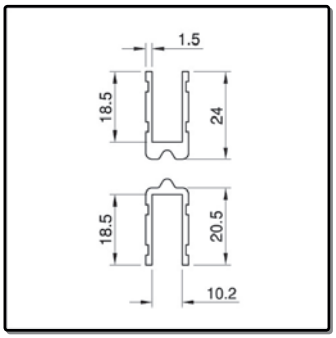

Schließprofilmale/female, 10.2mm, HD

Male + Female Lid Location 10.2mm
Heavy Duty

Aluminium *0,545 kg/m* *Aluminium or Anodized*

0524

Schließprofil male/fm, 10.2mm
glatt

Male + Female Lid Location 10.2mm

Aluminium *0,550 kg/m* *Aluminium*

0520

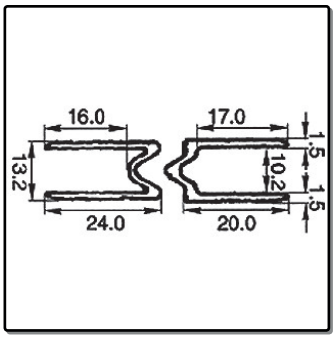

Schließprofil male/female, 10.2mm
Kederrinne

Male + Female Lid Location 10.2mm
Splashproof

Aluminium *0,518 kg/m* *Aluminium*

0520/3

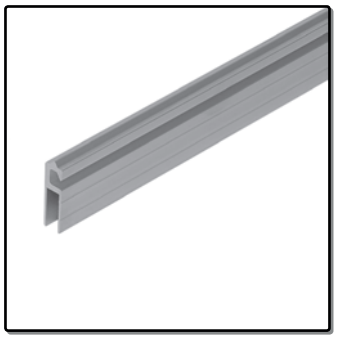

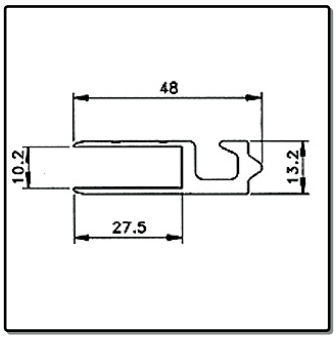

Schließprofil male, Einhaknut, 10.2mm

Male Lid Location with groove for
Locks, 10.2mm

Aluminium *0,613 kg/m* *Aluminium*

0523

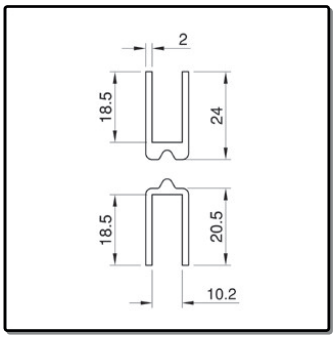

Schließprofil male/fm, 10.2mm
HD, glatt

Male + Female Lid Location 10.2mm
Heavy Duty

Aluminium *0,669 kg/m* *Aluminium*

0590

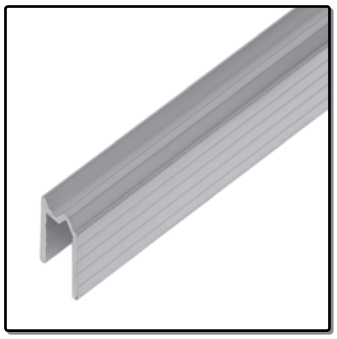

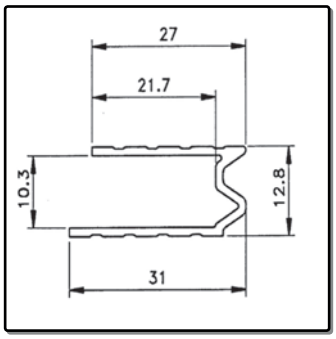

Schließprofil hybrid, 10.3mm

Hybrid Lid Location for 10.3mm

Aluminium *0,275 kg/m* *Aluminium*

E2375

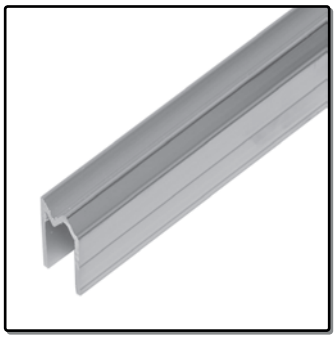

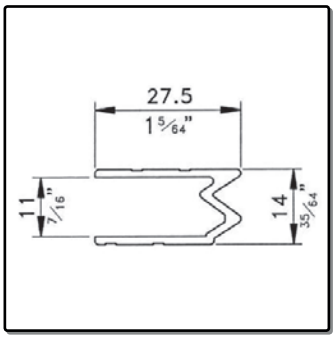

Schließprofil hybrid, 11mm

Hybrid Lid Location for 11mm

Aluminium *0,280 kg/m* *Aluminium*

E0826

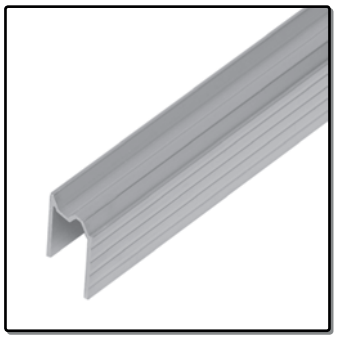

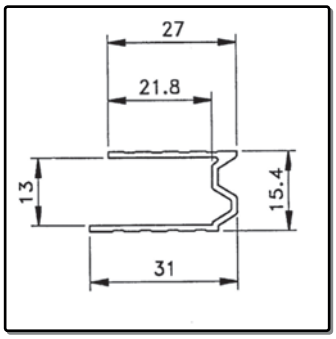

Schließprofil hybrid, 13mm

Hybrid Lid Location for 13mm

Aluminium *0,230 kg/m* *Aluminium*

0330

Gummikeder für Profile mit Kederrinne

3mm Gasket for Extrusions with Groove

Rubber *0,010 kg/m* *Black*

Anti-Vibration Rack System

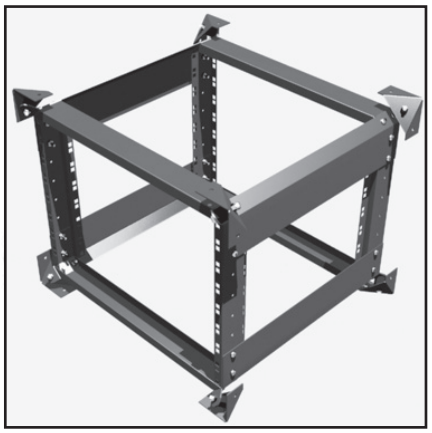

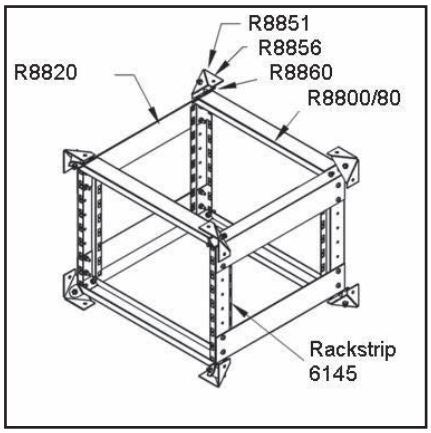

Verwendbar mit doppelter Rackschiene 6145.
Höhe durch ablängen der Rackschiene frei wählbar.

Easy assembling with
Double Rackstrip 6145
Every variation in Units is possible

6145
Doppelter Rackschiene
Double Rackstrip

R8800/80
19” Querstrebe
19” Crossbar

***Seitenbügel/*Sidebar**

R8820/14: 362mm	R8820/24: 607mm
R8820/16: 407mm	R8820/26: 662mm
R8820/18: 462mm	R8820/28: 707mm
R8820/20: 507mm	R8820/30: 762mm
R8820/22: 562mm	R8820/32: 807mm

R8851
Verbindungswinkel für 1 - 2 Shock Mounts
Mounting Bracket for 1 or 2 Shock Mounts

R8856
Eckwinkel für 1 - 2 Shock Mounts
Corner Support Bracket for 1 or 2 Shock Mounts

Schwingmetallsatz
Set of 8 50Kg Shock Mounts with Metric Fixings

R8860/50:	50KG
R8860/90:	90KG
R8860/200:	200KG

R8890
Montageset zum R8800 System
Metric Screw Set for R8800 System

Tragerschiene zum R8800 System
Side Bar for R8800 System
R8840/14: 350mm
R8840/18: 450mm
R8840/22: 550mm
R8840/26: 650mm
R8840/28: 750mm

Rackschienen - Rack Strips

6135

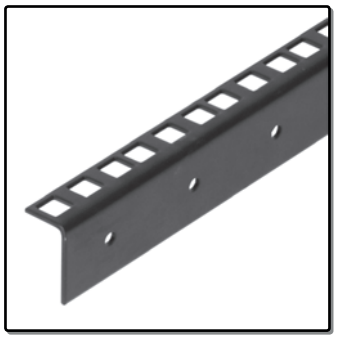

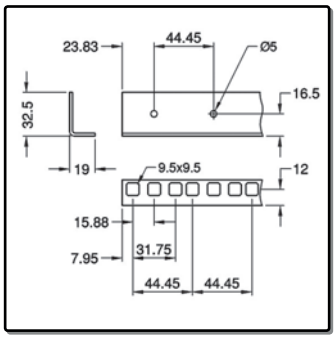

Rackschiene 0.5HE-Stanzung
für M6-Käfigmuttern (6131/1)

Full Hole Single Rack Strip
use Cagenut M6 (6131/1)

2,0mm Steel 0,650 kg/m Black

6135-..

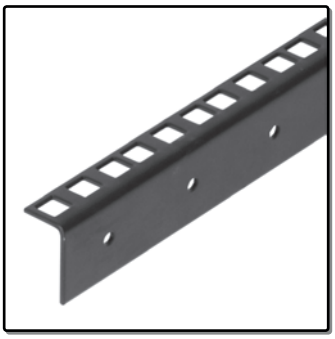

Rackschiene 0.5HE-Stanzung
auf Länge zugeschnitten 2HE-20HE

Full Hole Single Rack Strip
Available Cut From 2U to 20U

2.0mm Steel Black

6135/M6

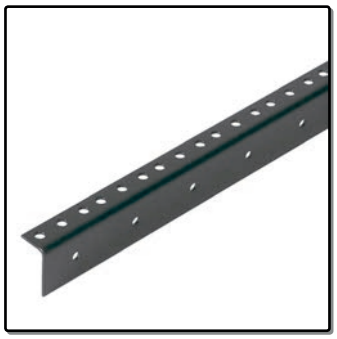

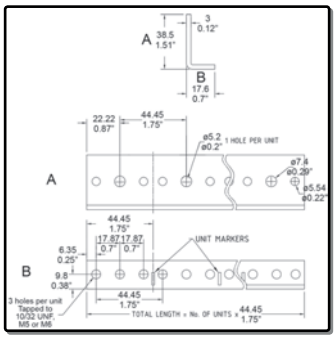

Rackschiene einfach mit M6-Gewinde
Keine zusätzlichen Muttern mehr nötig

Single Rack Strip tapped to M6
Use only screw M6
No cagenut needed

2,0mm Steel 0,650 kg/m Black

6145

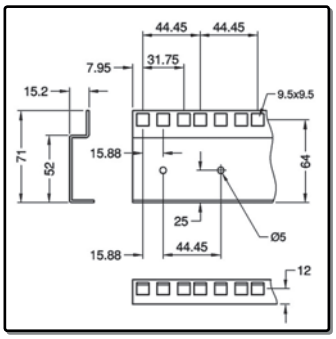

Rackschiene 0.5HE-Stanzung, doppelt
für M6-Käfigmuttern (6131/1)

Full Hole Double Rack Strip
use Cagenut M6 (6131/1)

2.0mm Steel 1,200 kg/m Black

6145-..

Rackschiene 0.5HE-Stanzung, doppelt
auf Länge zugeschnitten 2HE-20HE

Full Hole Double Rack Strip
Available Cut From 2U to 20U

2.0mm Steel Black

6145/M6

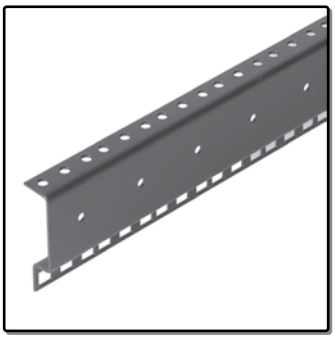

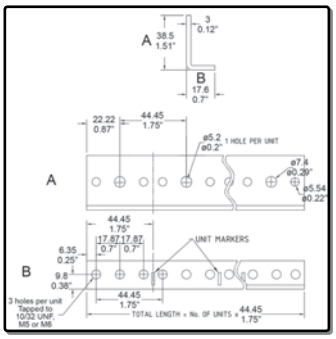

Rackschiene doppelt mit M6-Gewinde
Keine zusätzlichen Muttern mehr nötig

Double Rack Strip tapped to M6
Use only screw M6
No cagenut needed

2,0mm Steel Black

6060

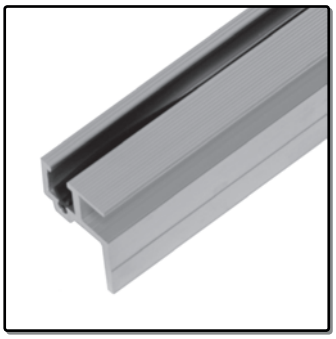

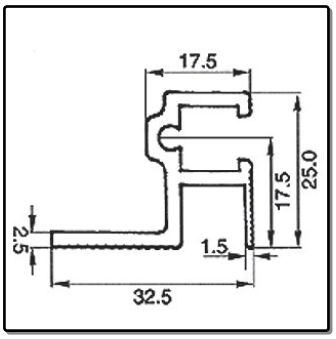

Rackschiene stufenlos, mit Klemm-Keder
für M6-Kronmuttern (6110/1)

Sliding Rack Strip + Fixing Gasket
use Nut M6 (6110/1)

Aluminium *0.510 kg/m* *Aluminium*

6102

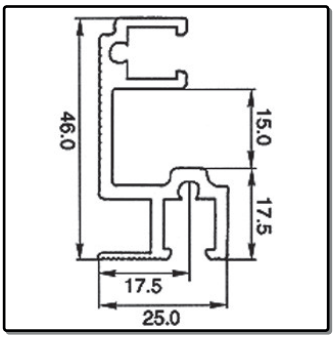

Rackschiene stufenlos doppelt, mit Keder
für M6-Kronmuttern (6110/1)

Double Sliding Rack Strip with Gasket
use Nut M6 (6110/1)

Aluminium *0.750 kg/m* *Alu*

6108

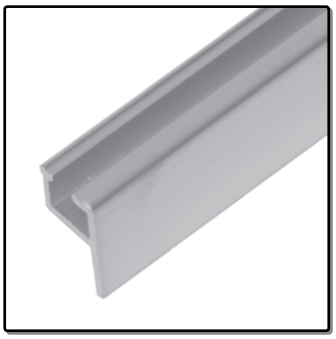

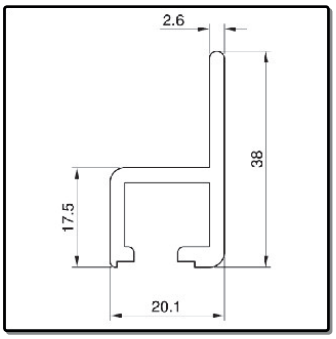

Rackschiene stufenlos
für M6-Käfigmuttern (6010/1)

Sliding Rack Strip
use Cagenut M6 (6010/1)

Aluminium *0,526 kg/m* *Aluminium*

6020

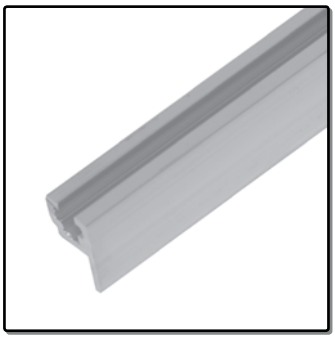

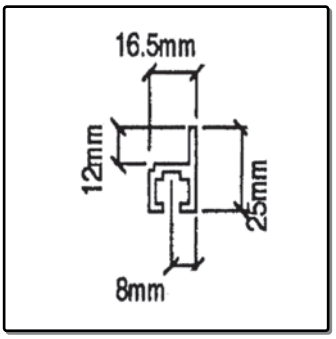

Rackschiene stufenlos
für M6-Vierkantmuttern (6030/1)

Sliding Rack Strip
use Square Nut M6 (6030/1)

Aluminium *0,380 kg/m* *Aluminium*

6000

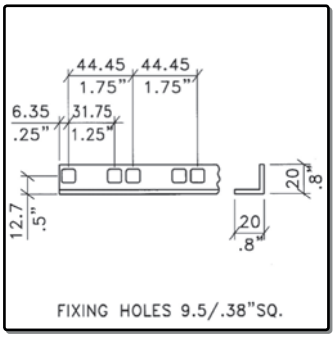

Rackschiene gestanzt
für M6-Kafigmuttern (6010/1)

Punched Rack Strip
use Cagenut M6 (6010/1)

3.0mm Alu. *0,301 kg/m* *Aluminium*

0690

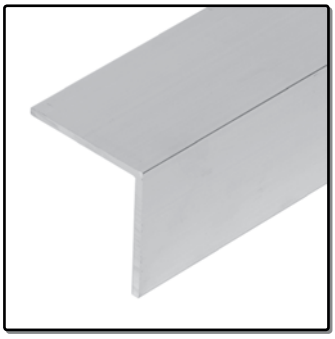

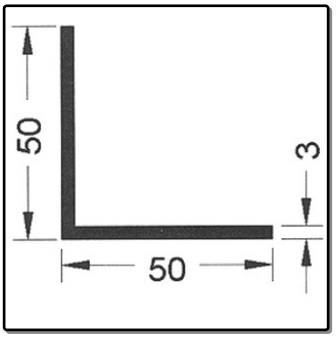

Winkelprofil 50x50x3mm
zu Herstellung von Trägerschienen

Angle 50x50x3mm
Use as Rack Shelf Support

Aluminium *0,786 kg/m* *Aluminium*

Rackschienen - Rack Strips

R0855k - R0858k

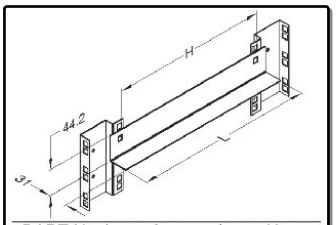

PART No.	L	H
R0855	305	267
R0856	406	368
R0857	508	470
R0858	610	572

Trägerschiene zu 6145
305mm - 610mm

Rack Shelf Support to suit 6145
305mm - 610mm

1.5mm Steel *0,300 kg/St.* *Black*

PM6CNK

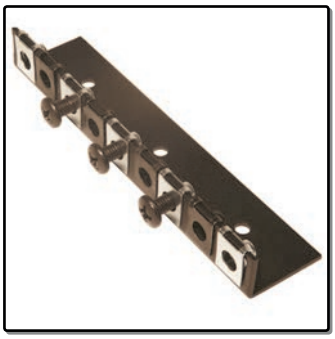

Gewindeklammer M6
für Rackschiene 6135 und 6145

Clip Nuts for Steel Rack Strip
Simply slides onto rack rail square hole
Suits Rack Strip 6135 & 6145

Steel *0,003 kg/St* *Black*

6131

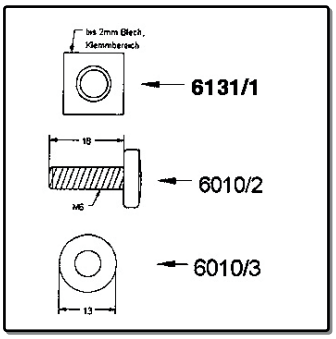

Befestigungssatz M6 für 6135 und 6145
6131/1: Käfigmutter M6
6010/2:M6x16, 6010/3:Kunststoffteller M6
Set of Nut+Screw+Washer for 6135 & 6145
6131/1: Cagenut M6
6010/2: Screw M6x16, 6010/3: Cup Washer

Steel/ABS *0,010 kg/St* *Black*

6110

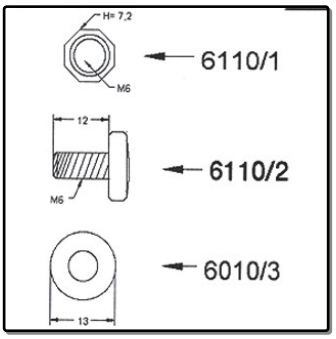

Befestigungssatz für 6060 und 6102
6110/1: Kronmutter M6
6110/2:M6x12, 6010/3:Kunststoffteller M6
Set of Nut+Screw+Washer for 6060 & 6102
6110/1: Nut M6
6110/2: Screw M6x12, 6010/3: Cup Washer

Steel/ABS *0,009 kg/St* *Black*

6010

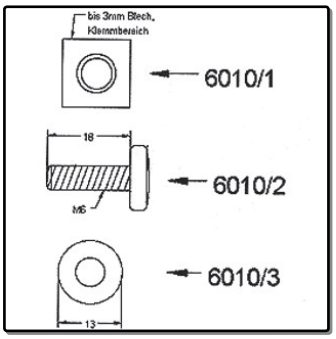

Befestigungssatz für 6000 und 6108
6010/1: Käfigmutter M6
6010/2:M6x16, 6010/3:Kunststoffteller M6
Set of Nut+Screw+Washer for 6000 & 6108
6010/1: Cagenut M6
6010/2: Screw M6x16, 6010/3: Cup Washer

Steel/ABS *0,010 kg/St* *Black*

6030

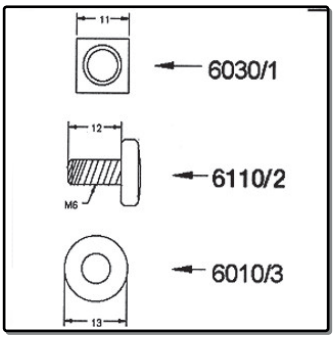

Befestigungssatz für 6020
6030/1: Vierkant-Flachmutter M6
6110/2:M6x12, 6010/3:Kunststoffteller M6
Set of Nut+Screw+Washer for 6020
6030/1: Nut M6
6110/2: Screw M6x12, 6010/3: Cup Washer

Steel/ABS *0,009 kg/St* *Black*

6110/1

Kronmutter M6 für 6060 und 6102

Nut for Rack Strip 6060 & 6102

Steel *0,003 kg/St* *Zinc*

6131/1 - 6010/1

Käfigmutter M6
6131/1 für Rackschiene 6135 und 6145
6010/1 für Rackschiene 6000 und 6108
Cagenut M6
6131/1 suits Rack Strip 6135 & 6145
6010/1 suits Rack Strip 6000 & 6108

Steel *0,004 kg/St* *Zinc*

6030/1

Vierkant-Flachmutter für Rackschiene 6020

M6 Square Nut suits Rack Strip 6020

Steel *0,002 kg/St* *Zinc*

6010/2 - 6110/2

Kreuzschlitzschraube M6, schwarz
6010/2: M6x16mm
6110/2: M6x12mm
M6 Pozi-Drive Pan Head Screws, Black
6010/2: M6x16mm
6110/2: M6x12mm

Steel *0,002 kg/St* *Black*

6190

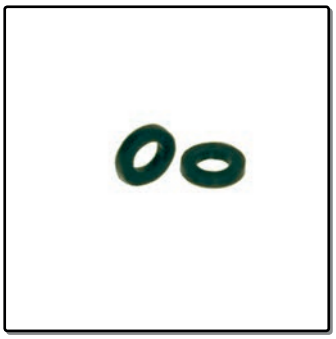

Kunststoffscheibe schwarz, für M6

Plain Black Plastic Washer, M6

ABS *0,100 kg/H.* *Black*

6010/3

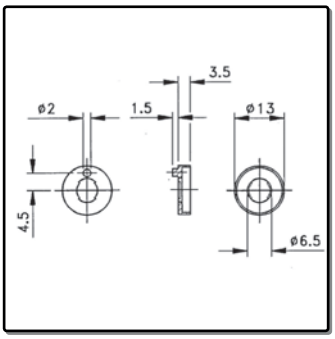

Kunststoffteller M6, Stopper, schwarz

M6 Cup Washer with Anti-Rotation Peg
Suitable for use in limited space applications

ABS *0,001 kg/St* *Black*

S1940

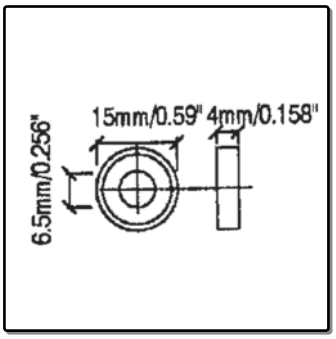

Kunststoffteller für M6 , dick, schwarz

M6 Cup Washer

Nylon *0,030 kg/H.* *Black*

Extrusion > Corner- and Brace Guide

Welche Ecken und L-Winkel passen am besten zu den Profilen?.
Diese Anleitung soll Ihnen helfen

Which Corner or Brace fits on your Angle Extrusion or Lidmaker ? This Guide will help you

Profil Extrusion		*Kugel-Ecke* Ball Corner	*Flach-Ecke* Flat Corner	*L-winkel* Brace
0121	20x20mm	C1345	C7082	1312
0122	20x20mm	C1345/01	1100c	B0715
0151	20x20mm	1050	CE-1054	
0152	20x20mm	CE-1026	CO-4358c	
0125	22x22mm	C1080 C1343	C7082 1100c	B1925
		C1344 C1345/01	1105c CO-4264c	
		C1345 C1347	C0670 CO-4349	
		1050	CE-1054	
0126	25x25mm	C1352 C1080	C0675 C7082	B1928
		C1343 C1345/01	1100c C0670	B1126
		C1345 1050	CO-4349	
0100	30x30mm	C1339 C1339/30	C1980	B1131 B1136
0153	30x30mm	C1340 C0650	C0697	B1123 B1128
0156	30x30mm	C0651 C1352	C0675	1302 B1121
0162	30x30mm	C1351 C1080	1130	B1124 B1125
0170	30x30mm	C1081	C7082	
0105	30x30mm, R5	C1377 C1377/30	C1850	B1130
0106	30x30mm, R5	C1365 C1352/00/R5	C0696	
0166	30x30mm, R5	C1363 C1079	C7079	
0154	30x30mm, R5			
0113	35x35mm	C1339 C1341/30-35	C1980	B1930
		C1340 C0658		
0112	35x35mm, R5	C1993		B1134
		C1366		B1135
0452	30mm	C1349	1130	
0455	30mm	C1346		
0450	30mm			
0470	30mm			
0445	30mm			
0425	30mm			
0400	20mm	1050	C7082	
0405	20mm			

C1339z

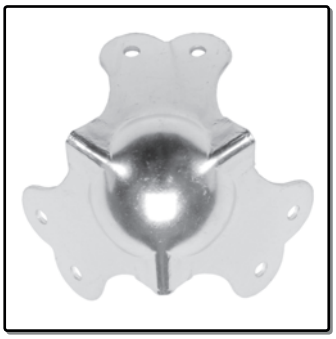

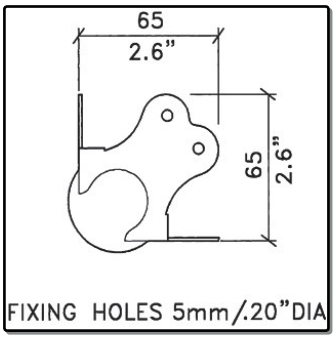

Kugel-Ecke groß

Large Ball Corner

1.8mm Steel *0,100 kg/St* *Zinc*

C1339/01z

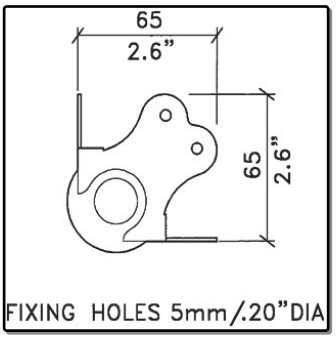

Kugel-Ecke groß, mit Stapeldelle

Large Ball Corner, Stackable

1.8mm Steel *0,100 kg/St* *Zinc*

C1993/3ez

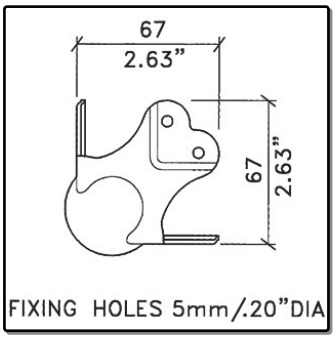

Kugel-Ecke groß, gestuft 36x36mm
9 Befestigungslöcher

Large Ball Corner, Offset
To suit Extrusions up to 36mm
9 Fittingholes

1.8mm Steel *0,123kg/St* *Matt Zinc*

C1341/30-35z

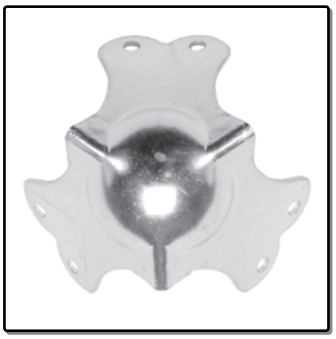

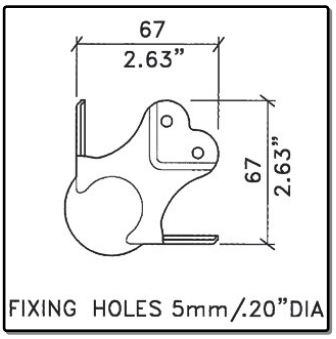

Kugel-Ecke groß, gestuft 35x35mm

Large Ball Corner, Offset
To suit Extrusions up to 35mm

1.8mm Steel *0,100 kg/St* *Zinc*

C1341/31-35z

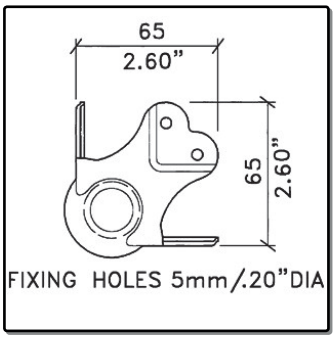

Kugel-Ecke groß, gestuft 35x35mm
mit Stapeldelle

Large Ball Corner, Offset, Stackable
To suit Extrusions up to 35mm

1.8mm Steel *0,100 kg/St* *Zinc*

C1339/30z

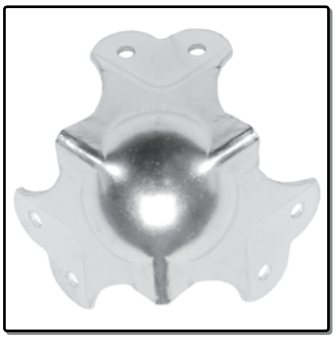

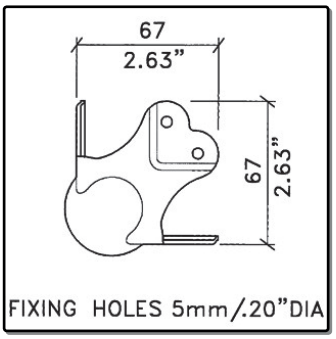

Kugel-Ecke groß, gestuft 30x30mm

Large Ball Corner, Offset
To suit Extrusions up to 30mm

1.8mm Steel *0,100 kg/St* *Zinc*

Ecken R2 - Corners R2

C1339/31z

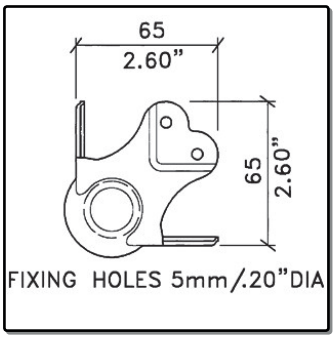

Kugel-Ecke groß, gestuft 30x30mm
mit Stapeldelle

Large Ball Corner, Offset, Stackable
To suit Extrusions up to 30mm

1.8mm Steel *0,100 kg/St* *Zinc*

C1340z

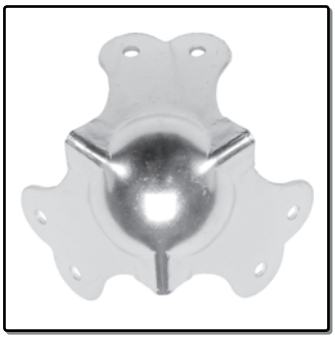

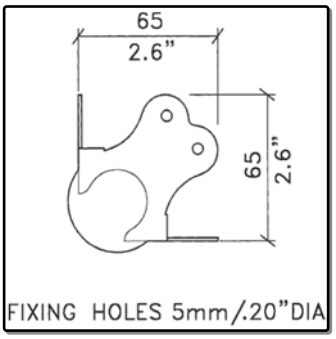

Kugel-Ecke groß

Large Ball Corner

1.5mm Steel *0,091 kg/St* *Zinc*

C1384z

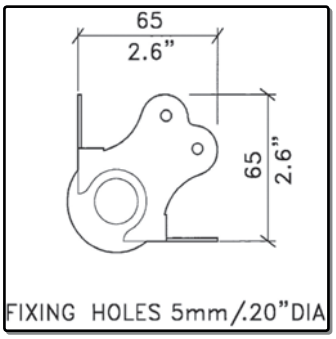

Kugel-Ecke groß, mit Stapeldelle

Large Ball Corner, Stackable

1.5mm Steel *0,087 kg/St* *Zinc*

C0650z

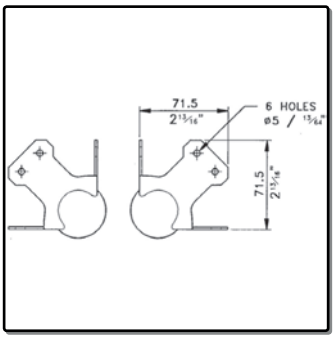

Kugel-Ecke groß

Large Ball Corner

2.0mm Steel *0,144 kg/St* *Zinc*

C0658

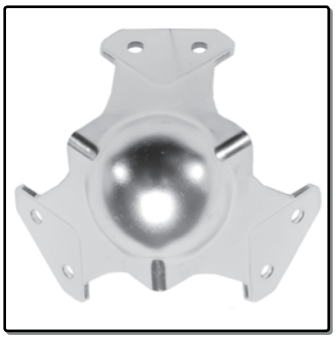

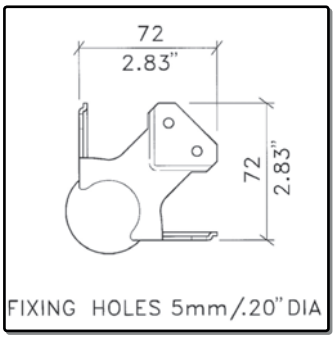

Kugel-Ecke groß, gestuft 35x35mm

Large Ball Corner, Offset
To suit Extrusion up to 35mm

2.0mm Steel *0,140 kg/St* *Zinc*

C0651z

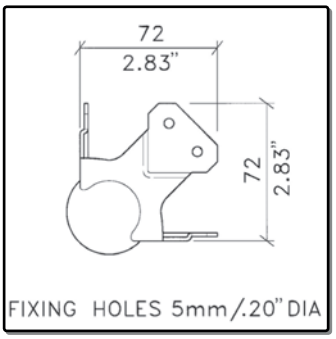

Kugel-Ecke groß, gestuft 30x30mm

Large Ball Corner, Offset
To suit Extrusion up to 30mm

2.0mm Steel *0,140 kg/St* *Zinc*

C1352

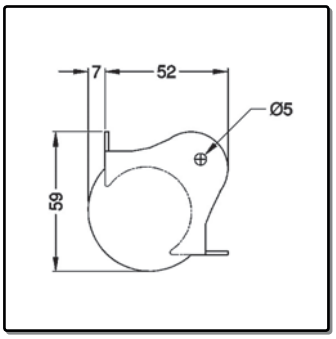

Kugel-Ecke medium

Medium Ball Corner

1.5mm Steel | 0,077 kg/St | Zinc

C1353z

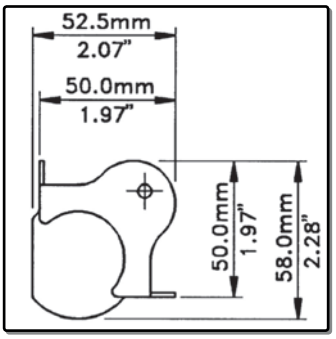

Kugel-Ecke medium, mit Stapeldelle

Medium Ball Corner, Stackable

1.5mm Steel | 0,076 kg/St | Zinc

C1351z

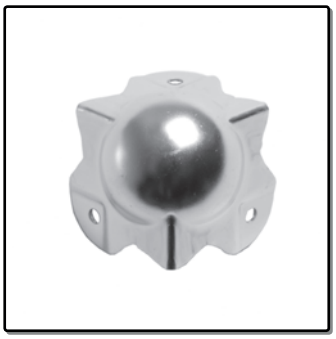

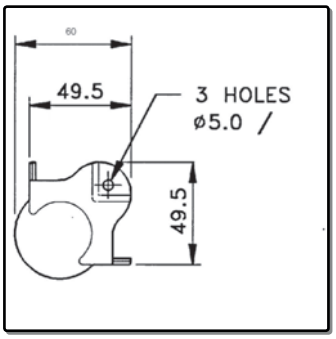

Kugel-Ecke medium, gestuft 30x30mm

Medium Ball Corner, Offset
To suit Extrusions up to 30mm

1.5mm Steel | 0,076 kg/St | Zinc

C1351/01z

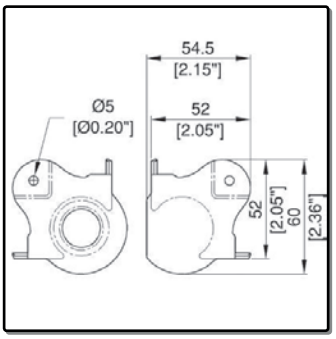

Kugel-Ecke medium, gestuft 30x30mm
mit Stapeldelle

Medium Ball Corner, Offset, Stackable

1.5mm Steel | 0,077 kg/St | Zinc

CF-8509

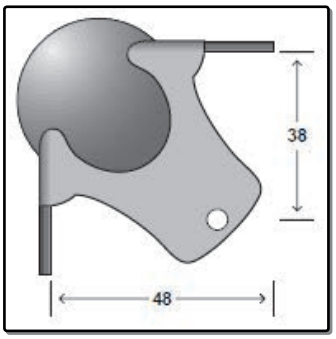

Kugel-Ecke medium "Fliteware"

Medium Ball Corner "Fliteware"

1.5mm Steel | 0,066kg/St | Zinc

C1080z

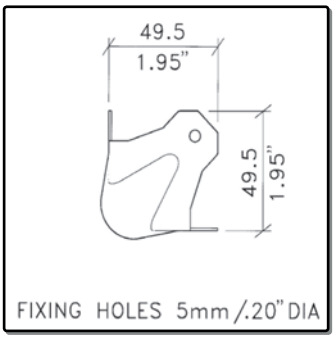

Kugel-Ecke klein

Small Ball Corner

1.2mm Steel | 0,048 kg/St | Zinc

Ecken R2 - Corners R2

C1081z

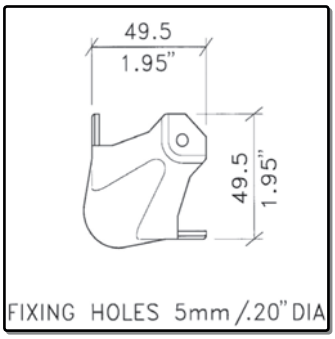

Kugel-Ecke klein, gestuft 30x30mm

Small Ball Corner, Offset
To suit Extrusions up to 30mm

1.2mm Steel *0,048 kg/St* *Zinc*

C1343

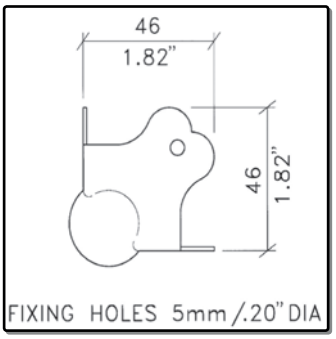

Kugel-Ecke klein

Small Ball Corner

1.2mm Steel *0,040 kg/St* *Zinc*

C1344z

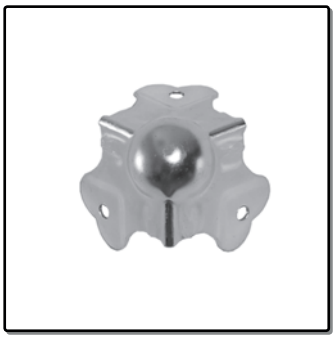

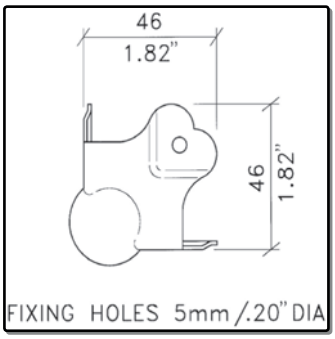

Kugel-Ecke klein, gestuft 22x22mm

Small Ball Corner, Offset
To suit Extrusions up to 22mm

1.2mm Steel *0,040 kg/St* *Zinc*

C1345z

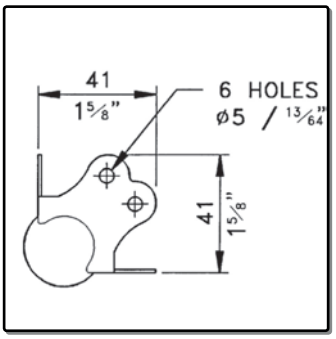

Kugel-Ecke klein
6 Bohrungen

Small Ball Corner
6 Fittingholes

1.2mm Steel *0,032 kg/St* *Zinc*

C1345-01z

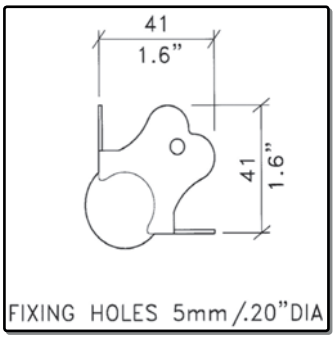

Kugel-Ecke klein

Small Ball Corner

1.2mm Steel *0,032 kg/St* *Zinc*

C1347z

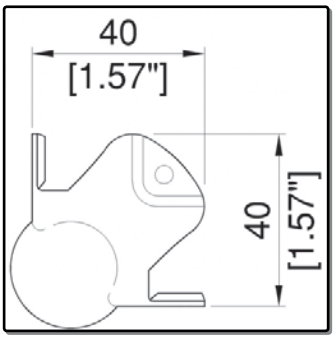

Kugel-Ecke klein, gestuft 22x22mm

Small Ball Corner, Offset
To suit Extrusions up to 22mm

1.2mm Steel *0,031 kg/St* *Zinc*

1050

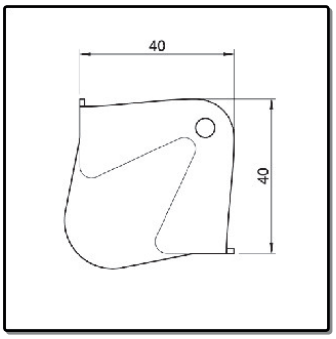

Kugel-Ecke klein
passend zu 0400 und 0405

Small Ball Corner
Fits Extrusion 0400 and 0405

1.2mm Steel *0,038 kg/St* *Zinc*

CE-1026

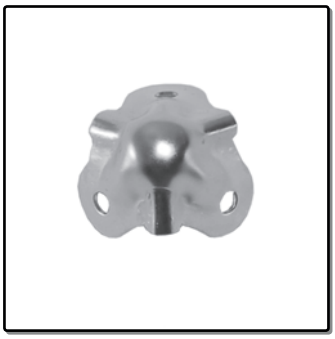

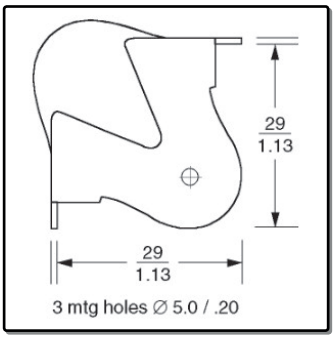

Kugel-Ecke mini

Mini Ball Corner

0.9mm Steel *0,013 kg/St* *Zinc*

C1374 - C1374/10z

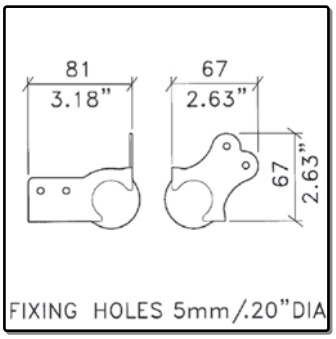

Kugel-Ecke mit Schließwinkel, Länge 78mm
C1374z: flach
C1374/10z: gestuft 30x30mm
Brace Ball Corner, Length 78mm
C1374z: plain
C1374/10z: to suit Extrusions 30x30mm

1.5mm Steel *0,100 kg/St* *Zinc*

CE-8579

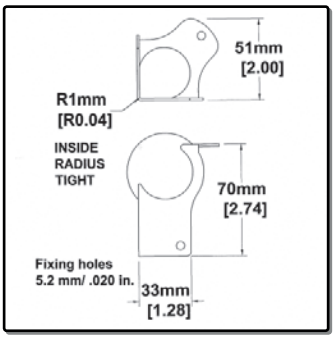

Kugel-Ecke medium, mit Schließwinkel
Länge 70mm

Brace Ball Corner
Length 70mm

1.5mm Steel *0,076 kg/St* *Zinc*

C1373

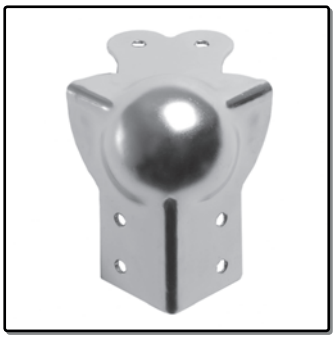

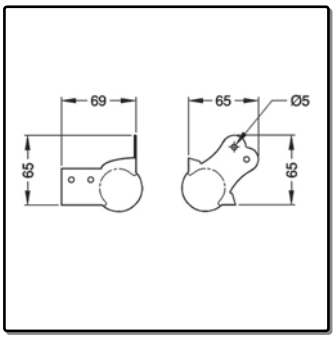

Kugel-Ecke mit Schließwinkel
Länge 67mm

Brace Ball Corner
Length 67mm

1.5mm Steel *0,100 kg/St* *Zinc*

C1359z

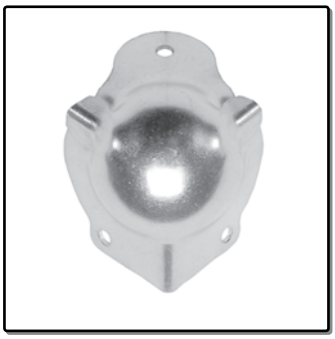

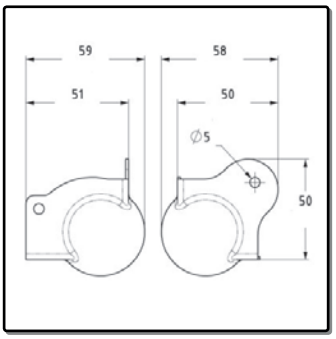

Kugel-Ecke mit Schließwinkel
Länge 51mm

Brace Ball Corner
Length 51mm

1.5mm Steel *0,100 kg/St* *Zinc*

Ecken R2 - Corners R2

C1349z

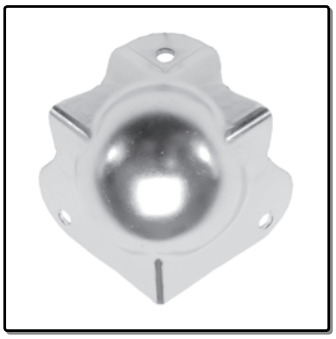

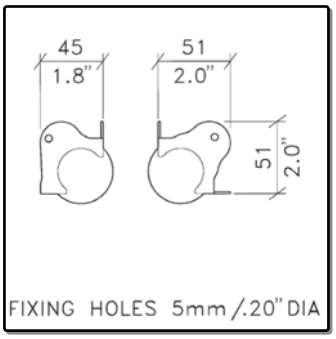

Kugel-Ecke mit Schließwinkel
Länge 43.5mm

Brace Ball Corner
Length 43.5mm

1.5mm Steel | 0,075 kg/St | Zinc

C1346z

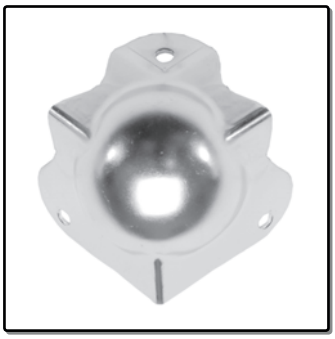

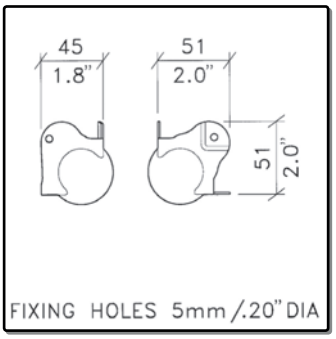

Kugel-Ecke mit Schließwinkel
1 Schenkel gestuft 30x30mm
Länge 43.5mm
Brace Ball Corner, Offset
To suit Extrusions up to 30mm
Length 43.5mm

1.5mm Steel | 0,073 kg/St | Zinc

C1082z

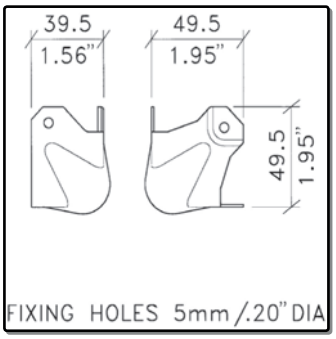

Kugel-Ecke mit Schließwinkel
gestuft 30x30mm
Länge 38mm
Brace Ball Corner, Offset
Length 38mm

1.2mm Steel | 0,047 kg/St | Zink

CF-8571

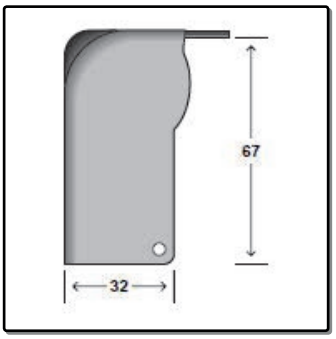

Flach-Ecke mit Schließwinkel 67mm
"Fliteware"

Brace Flat Corner 67mm "Fliteware"

1.5mm Steel | 0,070 kg/St | Zinc

C1980

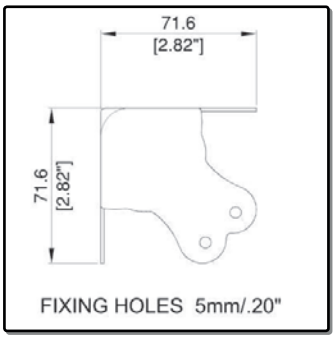

Flach-Ecke groß

Large Flat Corner

Steel | 0,087 kg/St | Zinc

C0697z

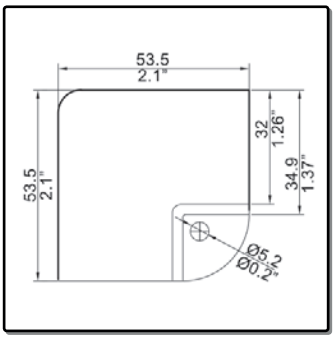

Flach-Ecke medium, gestuft 30x30mm

Medium Flat Corner, Offset
To suit Extrusions up to 30mm

1.5mm Steel | 0,082 kg/St | Zinc

C0675z

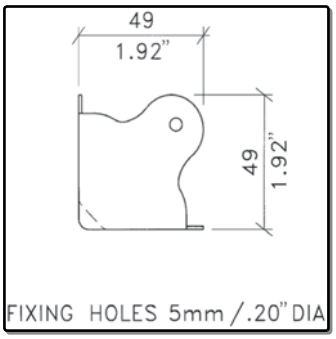

Flach-Ecke medium

Medium Flat Corner

1.0mm Steel | 0,040 kg/St | Zinc

C1150z

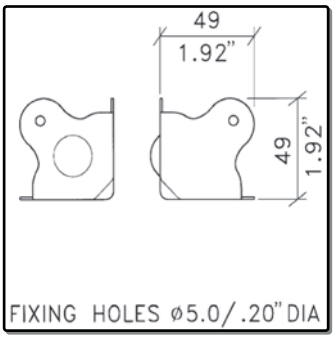

Flach-Ecke medium, mit Gleitkuppe

Medium Flat Corner with Bump

1.0mm Steel | 0,049 kg/St | Zinc

C1935z

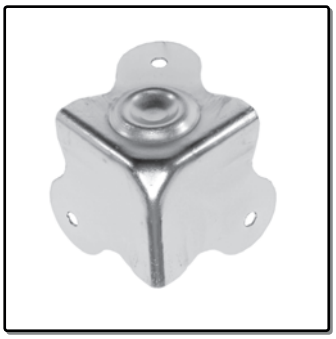

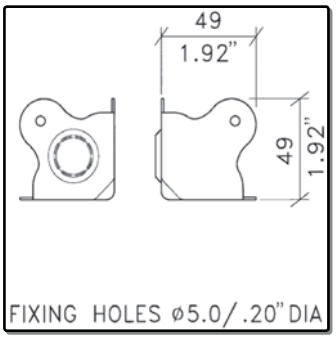

Flach-Ecke medium, mit Stellmulde

Medium Flat Corner Dimpled for C1150z

1.0mm Steel | 0,047 kg/St | Zinc

CF-8551z

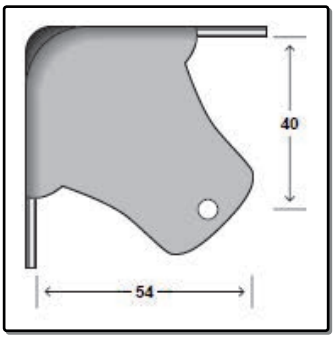

Flach-Ecke medium "Fliteware"

Medium Flat Corner "Fliteware"

1.5mm Steel | 0,060 kg/St | Zinc

1130

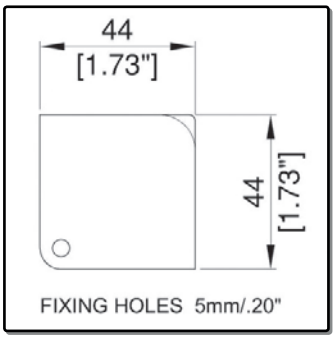

Flach-Ecke medium

Medium Flat Corner

1.0mm Steel | 0,039 kg/St | Zinc

C7082z

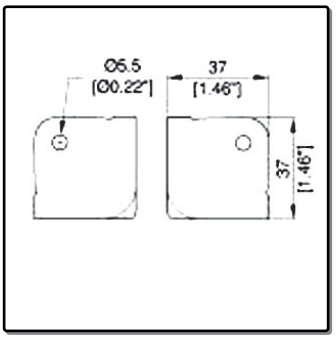

Flach-Ecke medium

Medium Flat Corner

1.0mm Steel | 0,025 kg/St | Zinc or Chrome

Ecken R2 - Corners R2

C7082/04z

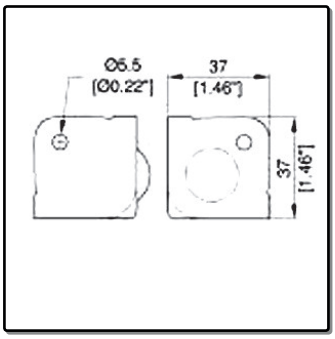

Flach-Ecke medium, mit Gleitkuppe

Medium Flat Corner with Glide

1.0mm Steel *0,026 kg/St* *Zinc*

C7082/01z

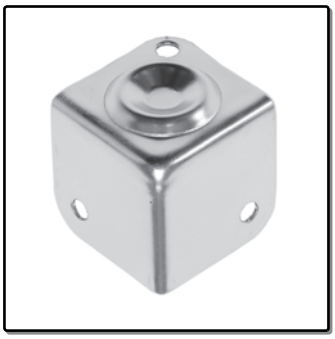

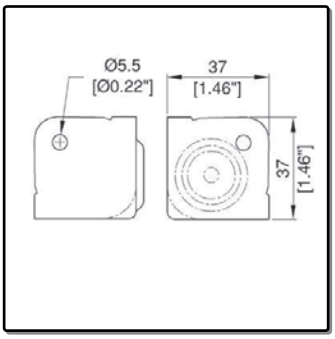

Flach-Ecke medium, mit Stellmulde

Medium Flat Corner, Dimpled

1.0mm Steel *0,025 kg/St* *Zinc*

1100c

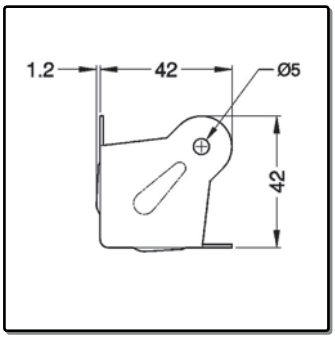

Flach-Ecke medium

Medium Flat Corner

1.0mm Steel *0,040 kg/St* *Chrome*

1105c

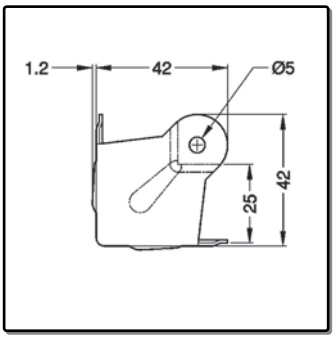

Flach-Ecke medium, gestuft 22x22mm

Medium Flat Corner, Offset
To suit Extrusions up to 22mm

1.0mm Steel *0,040 kg/St* *Chrome*

CO-4264c

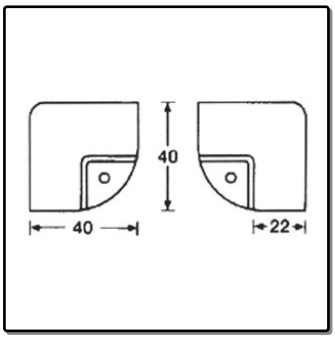

Flach-Ecke medium, gestuft 22x22mm
Osaka

Medium Flat Corner, Offset
To suit Extrusions up to 22mm
Osaka

1.0mm Steel *0,032 kg/St* *Chrome*

C0670n

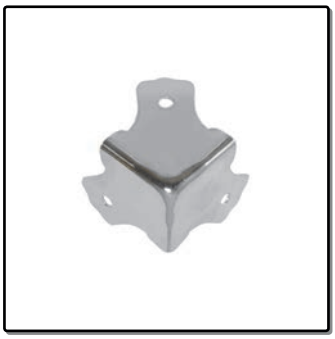

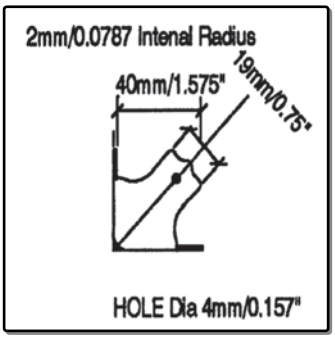

Flach-Ecke medium

Medium Flat Corner

1.0mm Steel *0,037 kg/St* *Black*

CO-4349c

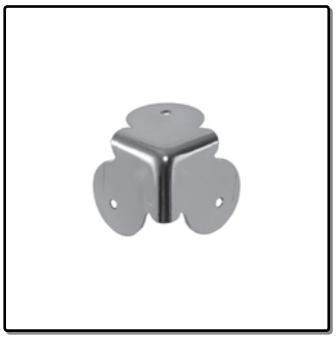

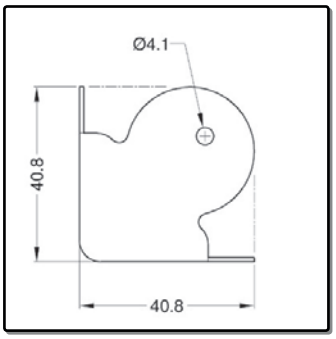

Flach-Ecke klein
Osaka

Small Flat Corner
Osaka

.75mm Steel *0,025 kg/St* *Chrome*

CE-1054

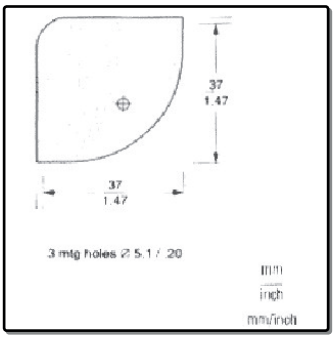

Flach-Ecke klein, halbrunde Schenkel

Small Flat Corner

Steel *0,021 kg/St* *Zinc*

CO-4358c

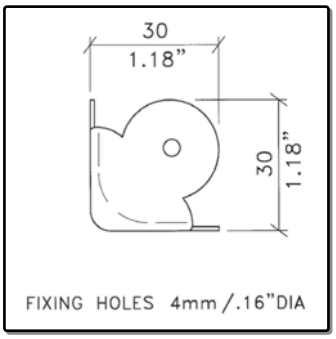

Flach-Ecke mini
Osaka

Mini Flat Corner
Osaka

.75mm Steel *0.005 kg* *Chrome*

C0675/30z

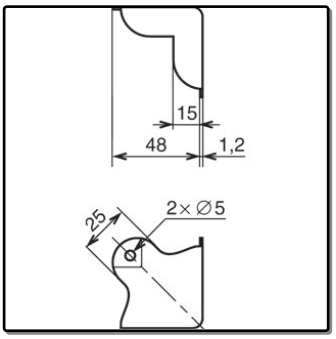

Ecke für Slam-Lid-Rahmenprofil (0490)

Flat corner for Slam Lid System
Fits Extrusion 0490

1.0mm Steel *0,050 kg/St* *Zinc*

Ecken R5 - Corners R5

C1377z

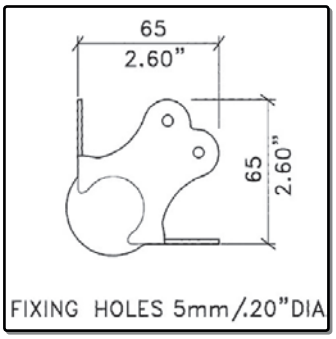

Kugel-Ecke groß

Large Ball Corner

1.8mm Stee | 0,120 kg/St | Zinc

C1377/01z

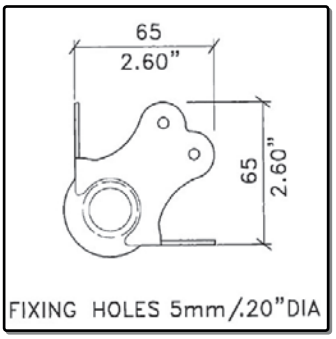

Kugel-Ecke groß, mit Stapeldelle

Large Ball Corner, Stackable

1.8mm Steel | 0,120 kg/St | Zinc

C1377/30z

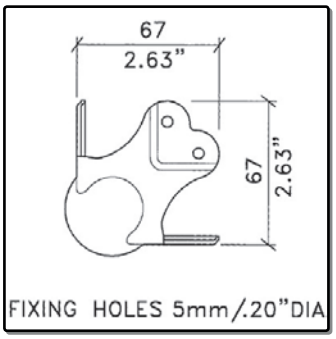

Kugel-Ecke groß, gestuft 30x30mm

Large Ball Corner, Offset
To suit Extrusions up to 30mm

1.8mm Steel | 0,120 kg/St | Zinc

C1377/31z

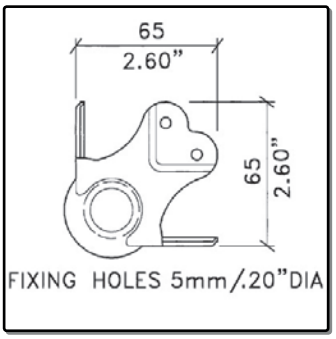

Kugel-Ecke groß, gestuft 30x30mm
mit Stapeldelle

Large Ball Corner, Offset, Stackable
To suit Extrusions up to 30mm

1.8mm Steel | 0,120 kg/St | Zinc

C1993z

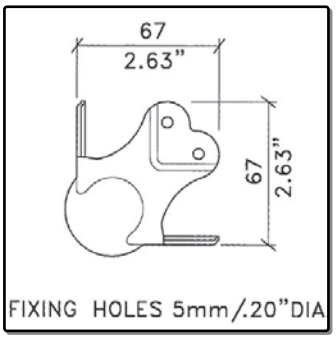

Kugel-Ecke groß, gestuft 35x35mm

Large Ball Corner, Offset
To suit Extrusions up to 35mm

2.0mm Steel | 0,120 kg/St | Zinc

C1993/01z

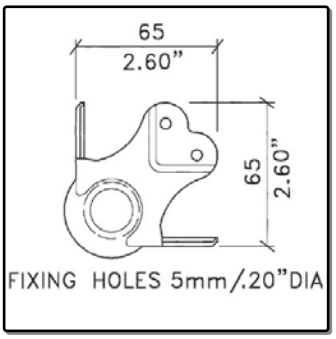

Kugel-Ecke groß, gestuft 35x35mm
mit Stapeldelle

Large Ball Corner, Offset, Stackable
To suit Extrusions up to 35mm

2.0mm Steel | 0,120 kg/St | Zinc

C1365

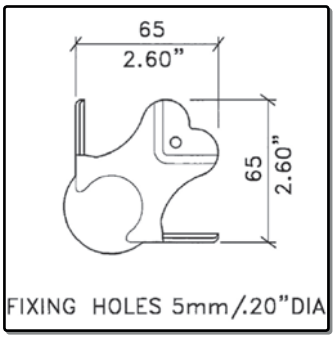

Kugel-Ecke groß, gestuft 30x30mm

Large Ball Corner, Offset
To Suit Extrusions up to 30mm

2.0mm Steel *0,121 kg/St* *Zinc*

C1366z

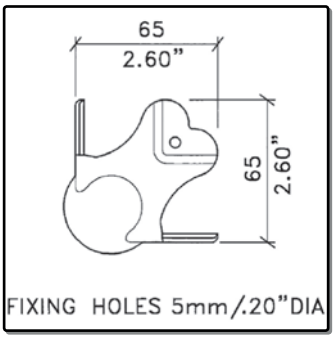

Kugel-Ecke groß, gestuft 35x35mm

Large Ball Corner, Offset
To suit Extrusions up to 35mm

2.0mm Steel *0,123 kg/St* *Zinc*

C1352/00/R5z

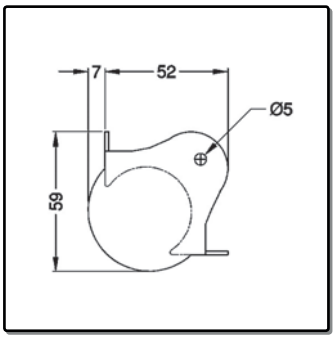

Kugel-Ecke medium

Medium Ball Corner

1.5mm Steel *0,077 kg/St* *Zinc*

C1353/00/R5z

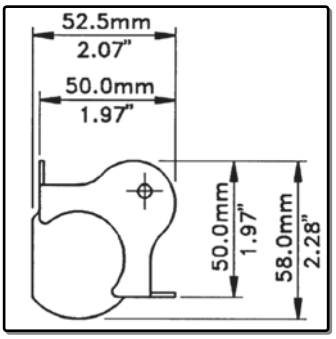

Kugel-Ecke medium, mit Stapeldelle

Medium Ball Corner, Stackable

1.5mm Steel *0,076 kg/St* *Zinc*

C1351/00/R5z

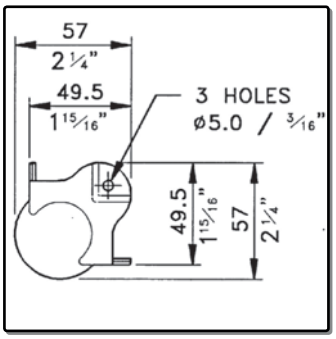

Kugel-Ecke medium, gestuft 30x30mm

Medium Ball Corner, Offset
To suit Extrusions up to 30mm

1.5mm Steel *0,076 kg/St* *Zinc*

C1351/01/R5z

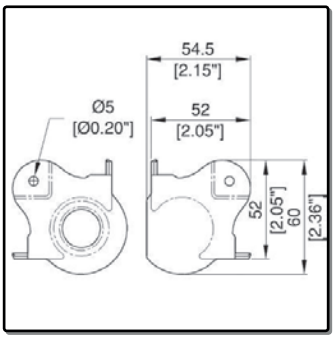

Kugel-Ecke medium, gestuft 30x30mm
mit Stapeldelle

Medium Ball Corner, Offset, Stackable

1.5mm Steel *0,077 kg/St* *Zinc*

Ecken R5 - Corners R5

C1363z

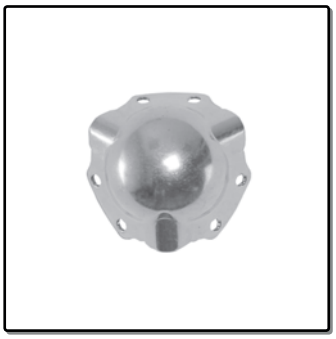

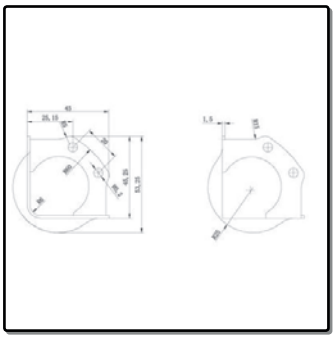

Kugel-Ecke medium
Vernietung im Kantenschutzprofil
30x30mm
Medium Ball Corner
Rivets mounted into Aluminium Extrusion
30x30mm

1.5mm Steel *0,060 kg/St* *Zinc*

C1364z

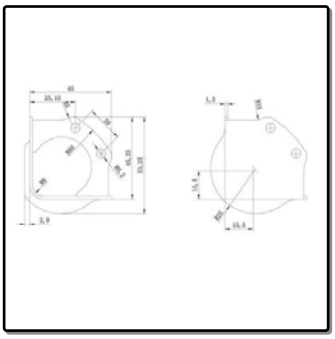

Kugel-Ecke medium, mit Stapeldelle
Vernietung im Kantenschutzprofil
30x30mm
Medium Ball Corner, Stackable
Rivets mounted into Aluminium Extrusion
30x30mm

1.5mm Steel *0,055 kg/St* *Zinc*

C1850z

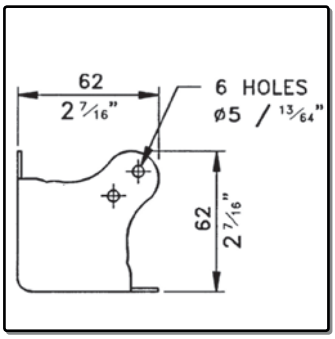

Flach-Ecke groß

Large Flat Corner

1.2mm Steel *0,070 kg/St* *Zinc*

C1855z

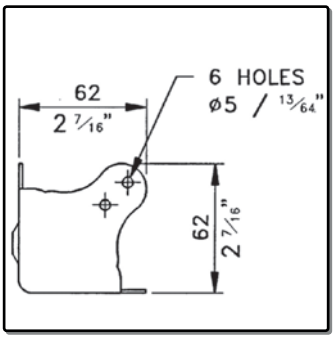

Flach-Ecke groß, mit Gleitkuppe

Large Flat Corner with Bump

1.2mm Steel *0,070 kg/St* *Zinc*

C1373/R5z

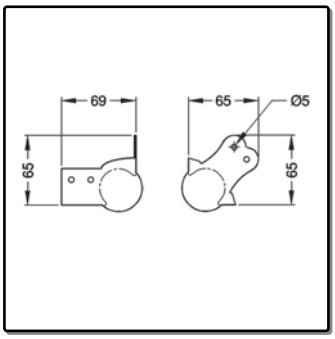

Kugel-Ecke R5 mit Schließwinkel R2
1 Schenkel gestuft 30x30mm
Länge 67mm
Brace R2 Ball Corner R5
To suit Extrusions up to 30mm
Length 67mm

1.5mm Steel *0,100 kg/St* *Zinc*

C0696z

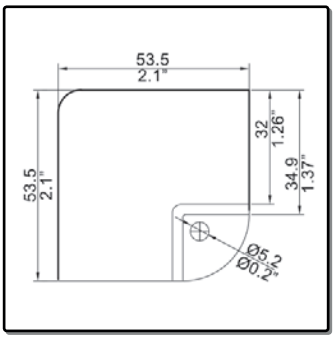

Flach-Ecke medium, gestuft 30x30mm

Medium Flat Corner, Offset
To suit Extrusions up to 30mm

1.5mm Steel *0,082 kg/St* *Zinc*

C7079z

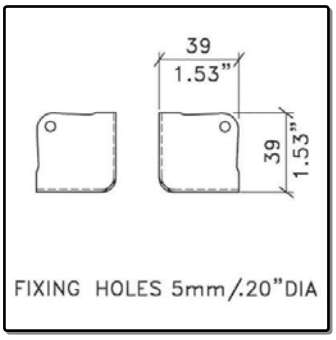

Flach-Ecke medium

Medium Flat Corner

1.0mm Steel *0,029 kg/St* *Zinc*

C7084z

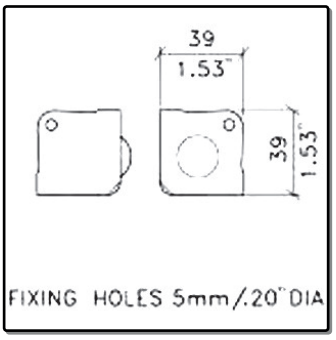

Flach-Ecke medium, mit Gleitkuppe

Medium Flat Corner with Glide

1.0mm Steel *0,025 kg/St* *Zinc*

Schließwinkel R2 - Braces R2

P50030/22/R1z

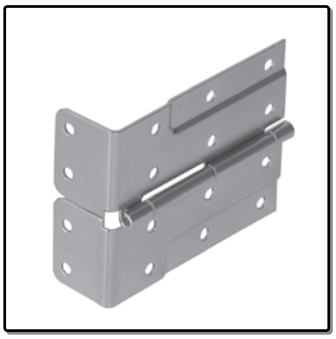

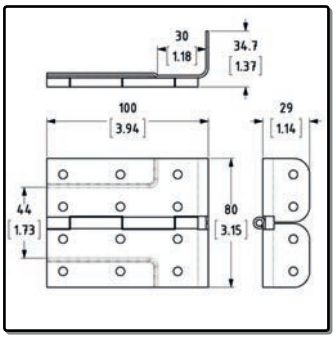

Scharnierstück im integr. L-Winkel B1121
IR2, gestuft für Schließprofil

Hinge/Brace B1121z
Hinge with Brace B1121z
Hinge with Offset for extra Strength

1.5mm Steel *0,130 kg/St* *Zinc*

B1131z

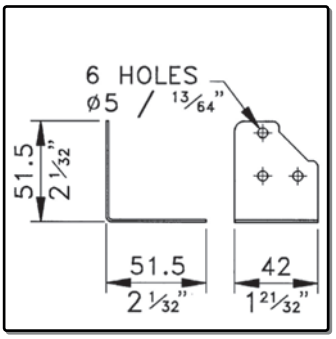

Schließwinkel 51x42mm

Brace 51x42mm

1.2mm Steel *0,025 kg/St* *Zinc*

B1136z

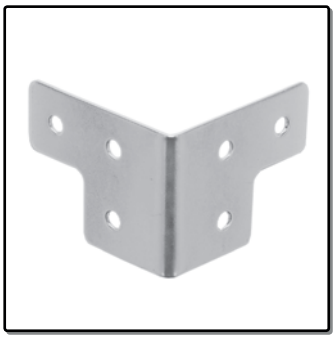

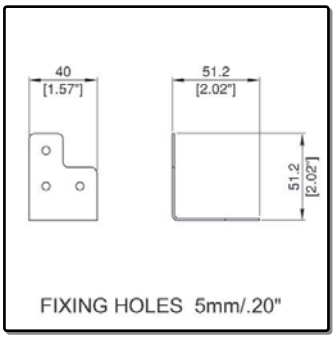

Schließwinkel 51.2x40mm
Passend zu 0100-0300

Brace 51.2x40mm
Suits Extrusions 0100 + 0300

1.2mm Steel *0,028 kg/St* *Zinc*

B1123z

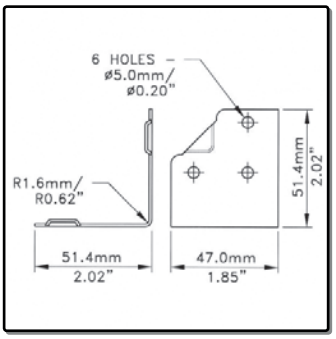

Schließwinkel 51x47mm
für Profile bis 30mm

Brace 51x47mm
To suit Extrusions up to 30mm

1.2mm Steel *0,040 kg/St* *Zinc*

B1128z

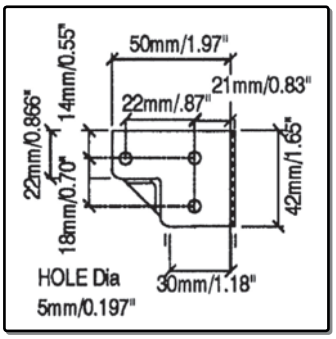

Schließwinkel 50x42mm, gestuft
für Profile bis 30mm

Brace 50x42mm, Offset
To suit Extrusions up to 30mm

1.2mm Steel *0,033 kg/St* *Zinc*

B1126

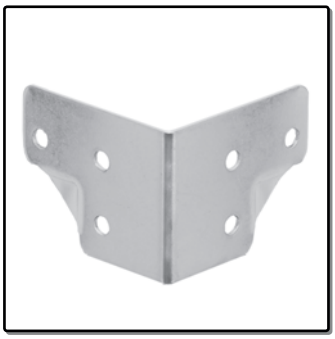

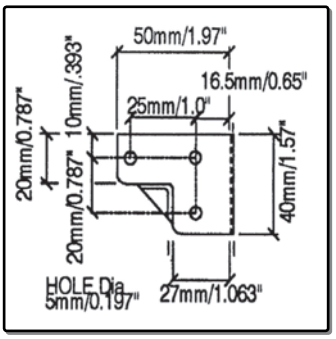

Schließwinkel 50x40mm, gestuft
für Profile bis 25mm

Brace 50x40mm, Offset
To suit Extrusions up to 25mm

1.2mm Steel *0,030 kg/St* *Zinc*

1365

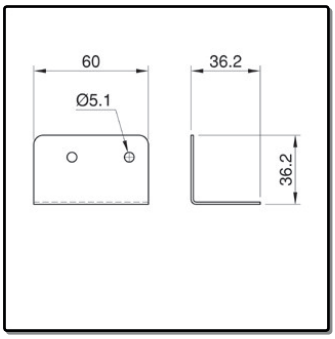

Schließwinkel 35x60 für 0520/3+0112

Brace 35x60mm
Fits Extrusions 0520/3 + 0112

1.2mm Steel *0,035 kg/St* *Zinc*

1360

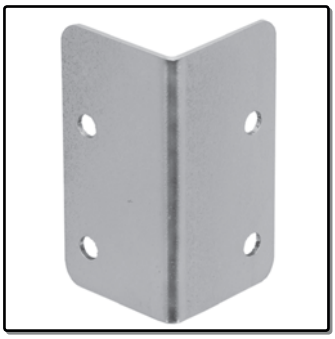

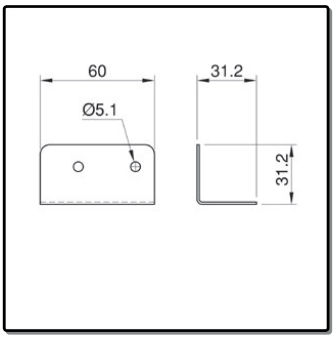

Schließwinkel 30x60 für 0329+0100

Brace 30x60mm
Fits Extrusions 0329 + 0100

1.2mm Steel *0,035 kg/St* *Zinc*

B1930z

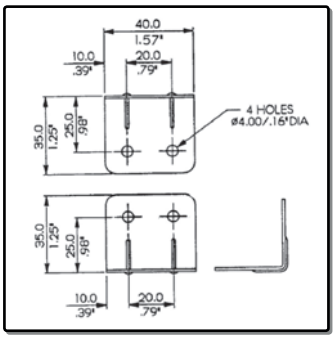

Schließwinkel 35x40mm
passend zu 0113

Brace 35x40mm
Fits Extrusion 0113

1.2mm Steel *0,024 kg/St* *Zinc*

1302

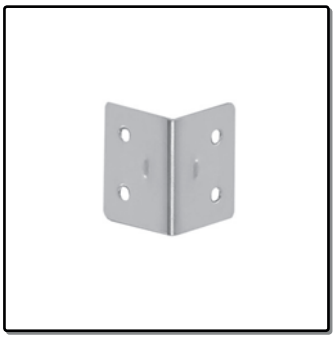

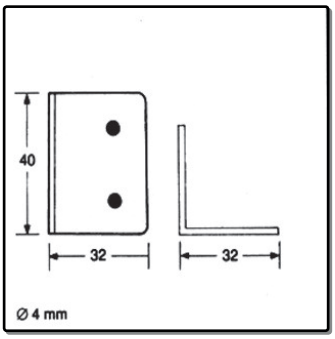

Schließwinkel 32x40mm
passend zu 0100

Brace 32x40mm
Fits Extrusion 0100

1.2mm Steel *0,018 kg/St* *Zinc*

B1121

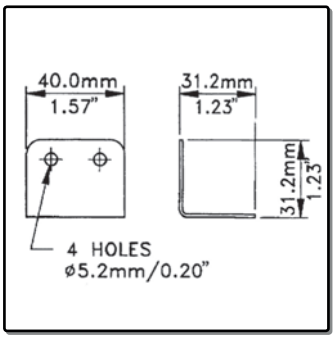

Schließwinkel 31.2x40mm
passend zu 0100

Brace 31.2x40mm
Fits Extrusion 0100

1.2mm Steel *0,021 kg/St* *Zinc or Black*

B1125

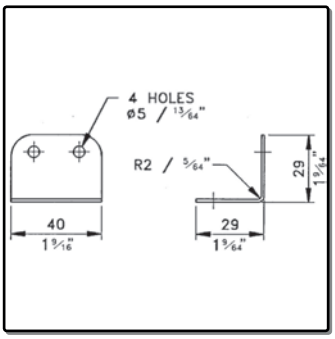

Schließwinkel 29x40mm
passend zu 0100

Brace 29x40mm
Fits Extrusion 0100

1.2mm Steel *0,020 kg/St* *Zinc or Stainless*

Schließwinkel R2 - Braces R2

B1124

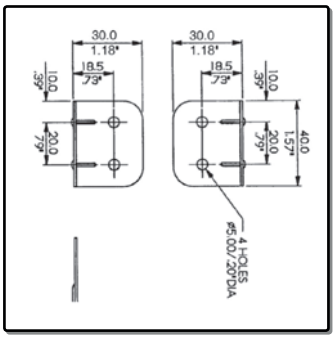

Schließwinkel 30x40mm mit Gleitkuppe
passend zu 0100

Brace 30x40mm, Glide

1.2mm Steel *0,020 kg/St* *Zinc*

B1928

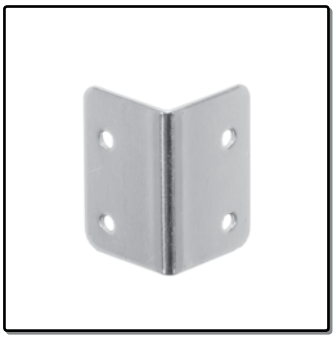

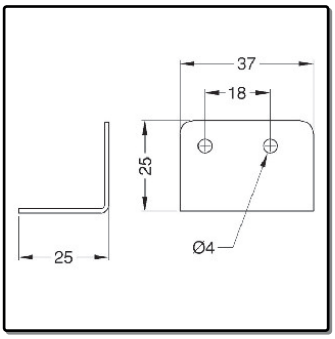

Schließwinkel 25x37mm
passend zu 0126

Brace 25x37mm
Fits Extrusion 0126

1.2mm Steel *0,010 kg/St* *Zinc*

B1925

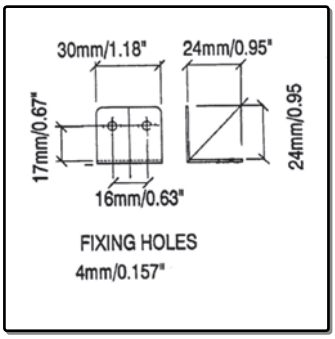

Schließwinkel 24x30mm
passend zu 0125

Brace 24x30mm
Fits Extrusion 0125

1.2mm Steel *0,010 kg/St* *Zinc*

1312

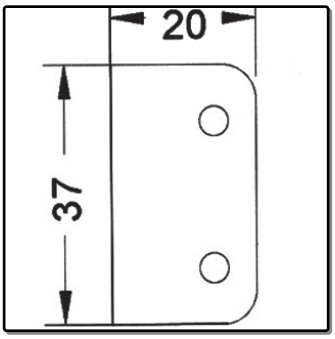

Schließwinkel 20x37mm
passend zu 0121 und 0122

Brace 20x37mm
Fits Extrusion 0121 and 0122

1.2mm Steel *0,012 kg/St* *Zinc or Chrome*

B1115z

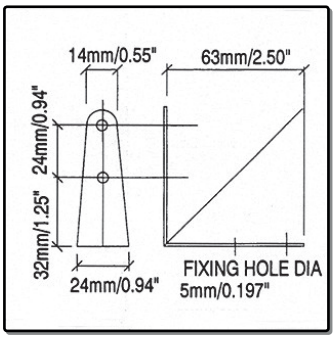

Schließwinkel 63x24mm

Brace 63x24mm

1.2mm Steel *0,022 kg/St* *Zinc*

B0702z

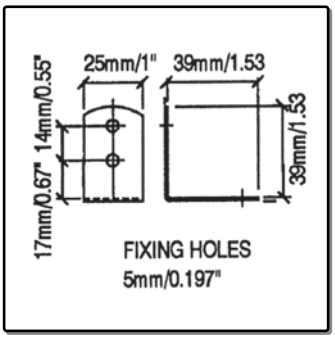

Schließwinkel 39x25mm

Brace 39x25mm

1.2mm Steel *0,010 kg/St* *Zinc*

B0700z

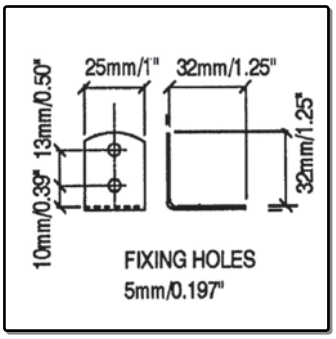

Schließwinkel 32x25mm

Brace 32x25mm

1.2mm Steel *0,010 kg/St* *Zinc*

B0715z

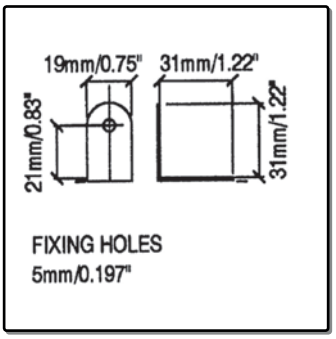

Schließwinkel 31x19mm

Brace 31x19mm

1.2mm Steel *0,010 kg/St* *Zinc*

B0706n

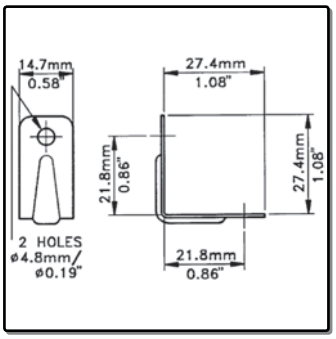

Schließwinkel 27x15mm mit Gleitkuppe

Brace 27x15mm, Glide

.75mm Steel *0,005 kg/St* *Nickel*

B1141z

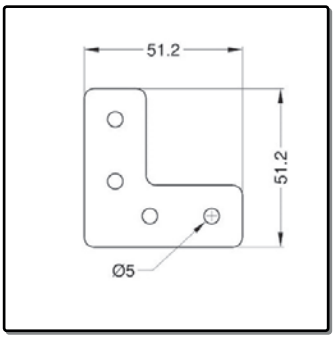

Abdeckwinkel, 51.2x20mm

L-Joiner, 51.2x20mm

1.2mm Steel *0,017 kg/St* *Zinc*

Schließwinkel R5 - Braces R5

B1135z

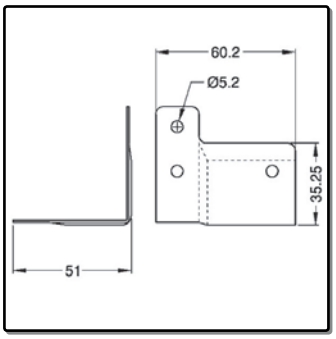

Schließwinkel 49x60mm
passend zu 0112

T-Brace 49x60mm
Fits Extrusion 0112

1.2mm Steel *0,049 kg/St* *Zinc*

B1134z

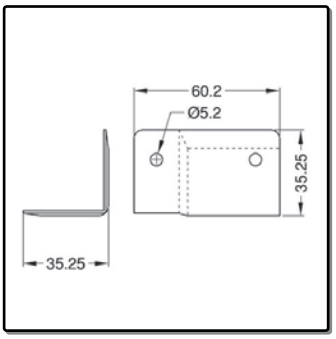

Schließwinkel 35x60mm
passend zu 0112

Brace 35x60mm
Fits Extrusion 0112

1.2mm Steel *0,022 kg/St* *Zinc*

B1130z

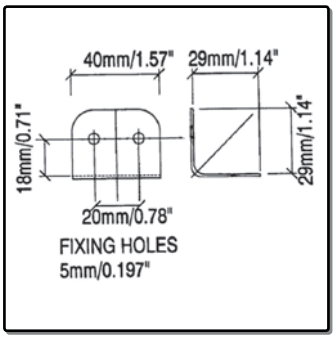

Schließwinkel 30x40mm
passend zu 0105, 0106, 0154 und 0166

Brace 30x40mm
Fits Extrusion 0105, 0106, 0154 and 0166

1.2mm Steel *0,020 kg/St* *Zinc*

P50030/22/R5z

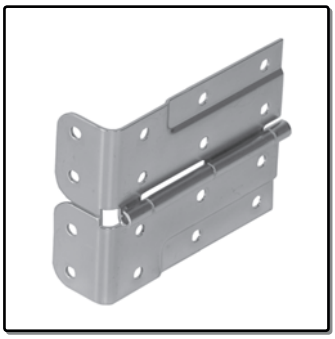

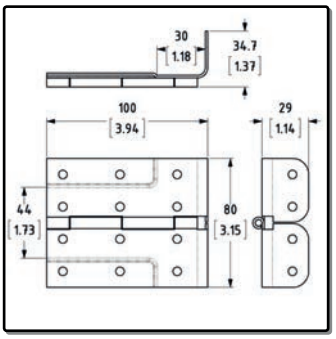

Scharnierstück im integr. L-Winkel B1130
IR5, gestuft für Schließprofil

Hinge/Brace B1130
Hinge with Brace B1130
Hinge with Offset for extra Strength

1.5mm Steel *0,130 kg/St* *Zinc*

L944/530

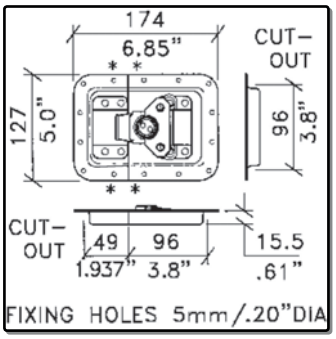

Butterfly groß in Einbauschale
Vordrückfeder

Large Butterfly Catch in Dish
Automatic

Steel *0,500 kg/St* *Zinc*

L944/537z

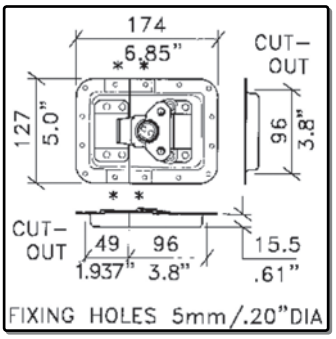

Butterfly groß in Einbauschale
Vordrückfeder
gestuft fur 27mm Schließprofil
Large Butterfly Catch in Dish
Automatic, Offset for 27mm Lid Location

Steel *0,468 kg/St* *Zinc*

L925/530-38

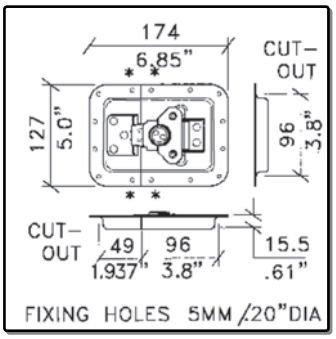

Butterfly groß in Einbauschale
Vordrückfeder
L925/530/10-38z: 10mm tiefe Schale
Large Butterfly Catch in Dish
Automatic
L925/530/10-38z: Dish 10mm deep

Steel *0,450 kg/St* *Zinc, Black or Stainless*

L925/537-38

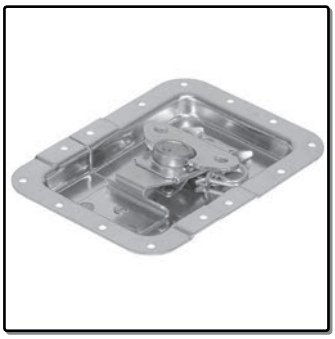

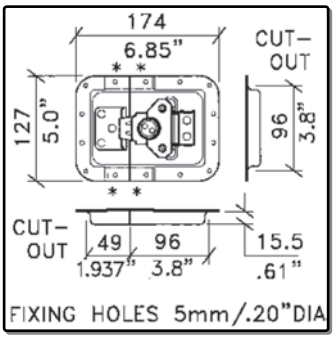

Butterfly groß in Einbauschale
Vordrückfeder, gestuft für 27mm Profil
L925/537/10-38z: 10mm tiefe Schale
Large Butterfly Catch in Dish
Automatic, Offset for 27mm Lid Location
L925/537/10-38z Dish 10mm deep

Steel *0,441 kg/St* *Zinc*

L911/530z

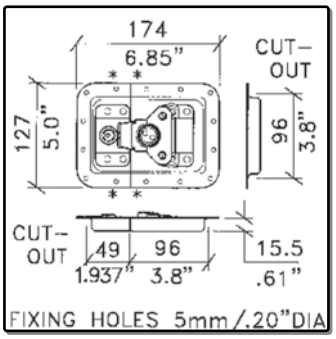

Butterfly groß in Einbauschale
Vordrückfeder, abschließbar

Large Butterfly Catch in Dish
Automatic, Lockable

Steel *0,500 kg/St* *Zinc*

L911/537z

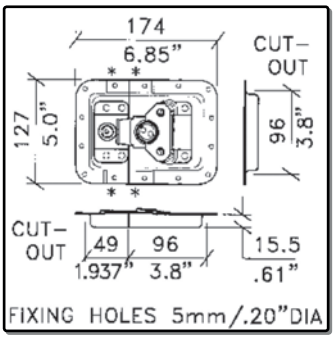

Butterfly groß in Einbauschale
Vordrückfeder, abschließbar
gestuft fur 27mm Schließprofil
Large Butterfly Catch in Dish
Automatic, Lockable
Osset for 27mm Lid Location

Steel *0,475 kg/St* *Zinc*

L935/530z

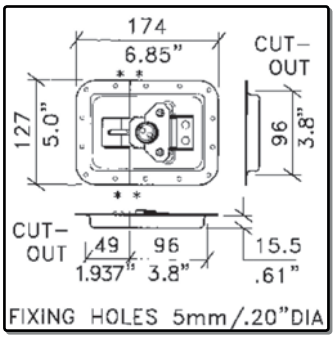

Butterfly groß in Einbauschale
Öse an der Zunge

Large Butterfly Catch in Dish
Padlock in Dish

Steel *0,480 kg/St* *Zinc*

L935/537z

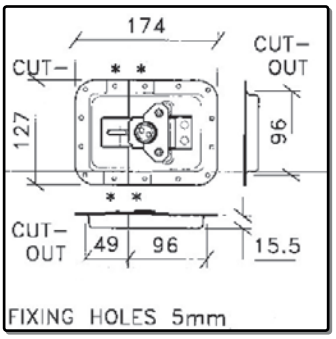

Butterfly groß in Einbauschale
Öse an der Zunge
gestuft für 27mm Schließprofil
Large Butterfly Catch in Dish
Padlock in Dish
Offset for 27mm Lid Location

Steel *0,434 kg/St* *Zinc*

L924/525/CL

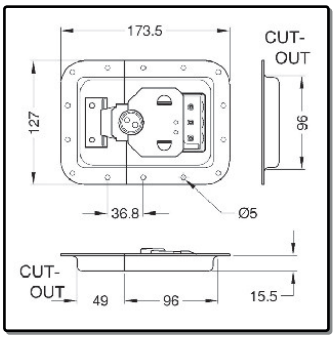

Butterfly groß in Einbauschale
Zahlenschloß

Large Butterfly Catch in Dish
Combination Lock

Steel *0,630 kg/St* *Zinc*

L844/837-10z

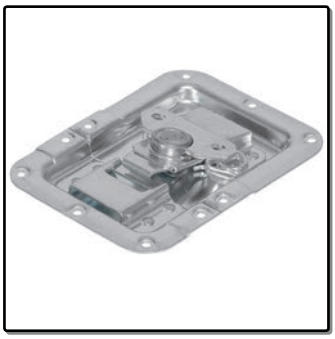

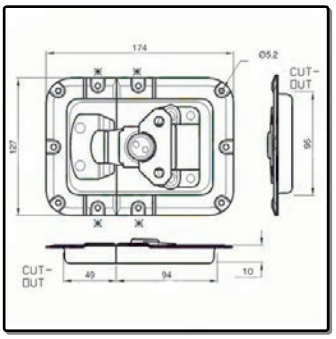

Butterfly groß in Einbauschale
Vordrückfeder, gestuft fur 27mm Profil
Evolution Schale
Large Butterfly Catch in Dish
Automatic, Offset for 27mm Lid Location
Evolution Dish

Steel *0,410 kg/St* *Zinc*

L0526

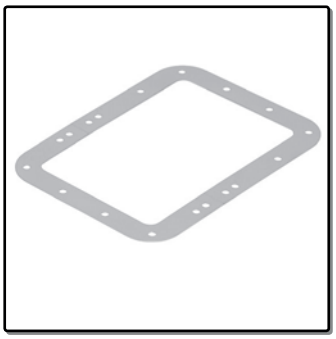

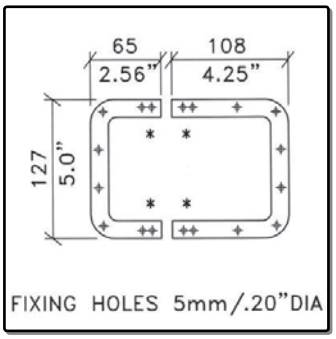

Nietrahmen für große Schale, 2 Teile

Backplate Large Butterfly Catch in Dish

Steel *0,039 kg/St* *Raw*

L905/928z

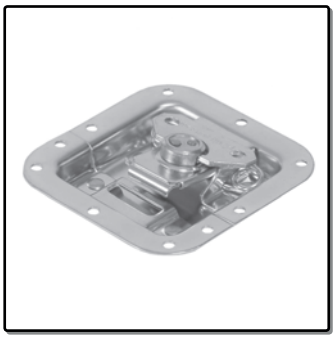

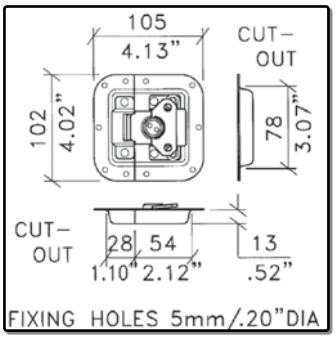

Butterfly mittel in Einbauschale
Vordrückfeder

Medium Butterfly Catch in Dish
Automatic

Steel *0,228 kg/St* *Zinc*

L907/928

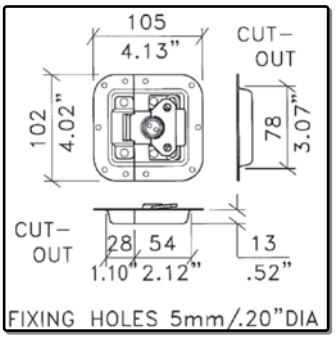

Butterfly mittel in Einbauschale
Vordrückfeder, gestuft

Medium Butterfly Catch in Dish
Automatic, Offset

Steel *0,230 kg/St* *Zinc*

L9075/928

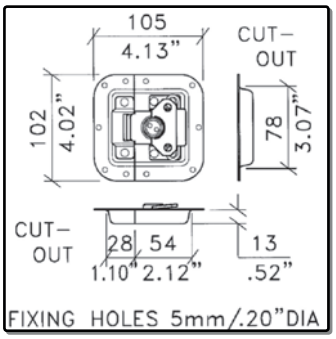

Butterfly mittel in Einbauschale
Vordruckfeder, Unterteil gestuft
Oberteil flach anliegend
Medium Butterfly Catch in Dish
Automatic, Lock Part: Offset
Top Part: Flat

Steel *0,225 kg/St* *Zinc*

L905/915

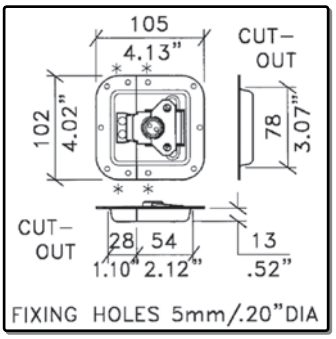

Butterfly mittel in Einbauschale
13mm tiefe Schale

Medium Butterfly Catch in Dish
Dish 13mm deep

Steel *0.240 kg* *Zinc, Black or Stainless*

L905/915/10z

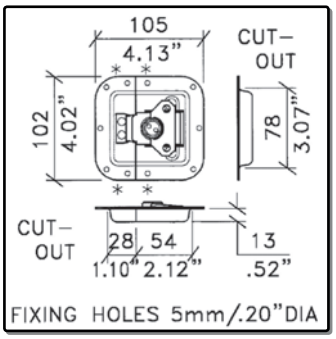

Butterfly mittel in Einbauschale
10mm tiefe Schale

Medium Butterfly Catch in Dish
Dish 10mm deep

Steel *0,218 kg/St* *Zinc*

L905/915/07z

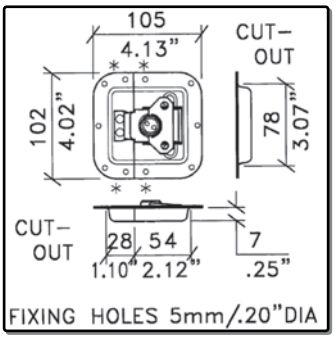

Butterfly mittel in Einbauschale
7mm tiefe Schale

Medium Butterfly Catch in Dish
Dish 7mm deep

Steel *0,218 kg/St* *Zinc*

L907/915z

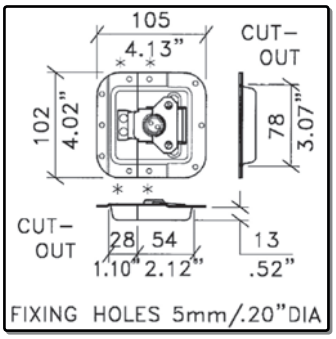

Butterfly mittel in Einbauschale
gestuft
L907/915/10z: 10mm tiefe Schale
Medium Butterfly Catch in Dish
Offset
L907/915/10z: Dish 10mm deep

Steel *0,220 kg/St* *Zinc*

L9075/915

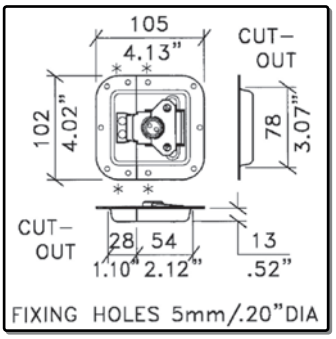

Butterfly mittel in Einbauschale
Unterteil gestuft
Oberteil flach anliegend
Medium Butterfly Catch in Dish
Lock Part: Offset
Top Part: Flat

Steel *0,219 kg/St* *Zinc*

L905/927TSAz

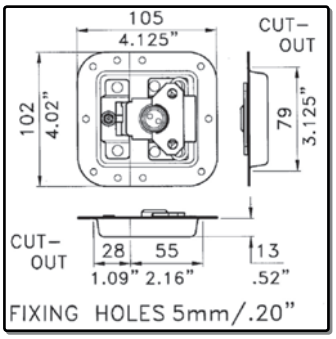

Butterfly mittel in Einbauschale
Vordrückfeder, TSA-Schloß

Medium Butterfly Catch in Dish
Automatic, TSA Lockable

Steel *0,220 kg/St* *Zinc*

L908/915

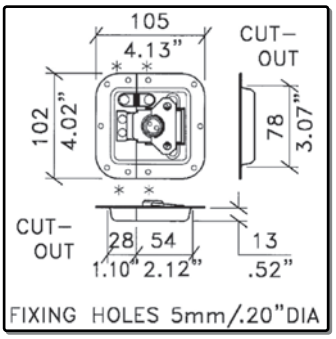

Butterfly mittel in Einbauschale
Öse in der Schale
L908/915/10z: 10mm tiefe Schale
Medium Butterfly Catch in Dish
Padlock in Dish
L908/915/10z: Dish 10mm deep

Steel *0,240 kg/St* *Zinc*

L907/915PBz

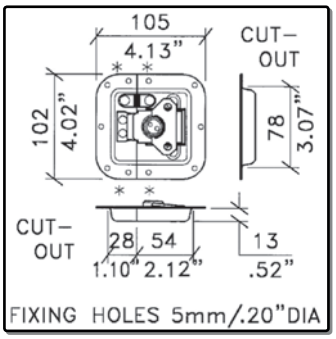

Butterfly mittel in Einbauschale
gestuft, Öse in der Schale

Medium Butterfly Catch in Dish
Offset, Padlock in Dish

Steel *0,240 kg/St* *Zinc*

L0906

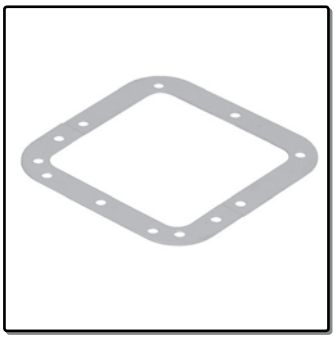

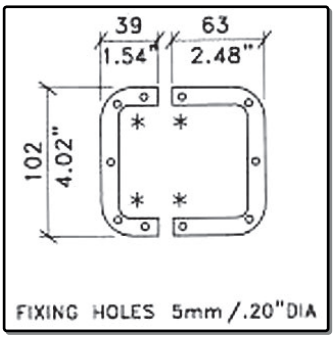

Nietrahmen für medium Schale, 2 Teile

Backplate Medium Butterfly Catch in Dish

Steel *0,031 kg/St* *Raw*

L904/914z

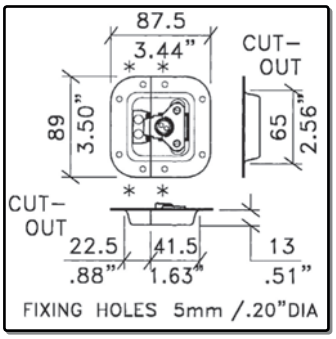

Butterfly klein in Einbauschale

Small Butterfly Catch in Dish

Steel *0,131 kg/St* *Zinc*

LE-3759

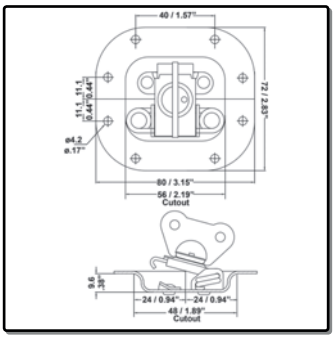

Butterfly mini in kompakter Einbauschale

Mini Butterfly Catch in Dish

Steel *0,100 kg/St* *Zinc*

L903-7336z

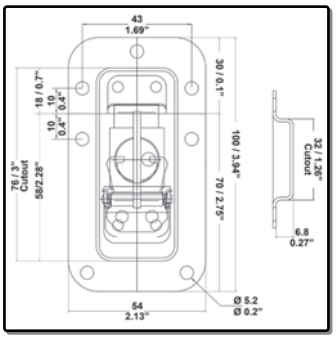

Butterfly klein in Einbauschale
Vordrückfeder
Speziel für 19" Racks
Small Butterfly Catch in Dish
Automatic
Special for 19" Racks

Steel *0,104 kg/St* *Zinc*

2300

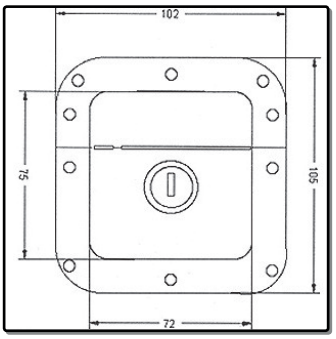

Einbauschloß

Recessed Assembly Lock

Steel *0,298 kg/St* *Zinc*

L0747/28z - /68z

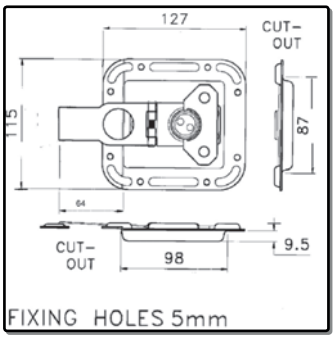

Überwurfcatch groß
Zungenlänge 28-, 32-, 50-, 57-,
64- oder 68mm
Large Valance Spanning Overlatch in Dish
Hook Length from Offset 28-, 32-, 50-,
57-, 64- and 68mm

Steel *0,310 kg/St* *Zinc*

L0747/50z

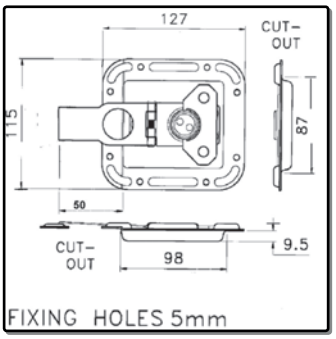

Überwurfcatch groß
Zungenlänge 50mm
passend zu 0450 o. 0445 + Schließprofil
Large Valance Spanning Overlatch in Dish
Hook Length from Offset 50mm
Fits Extrusions 0405 + 0445

Steel *0,310 kg/St* *Zinc*

L0967z

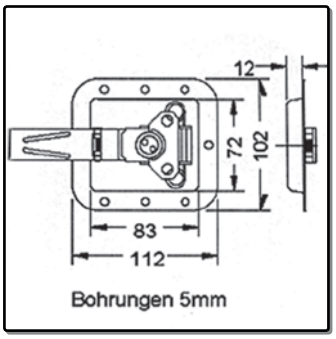

Überwurfcatch medium

Med. Valance Spanning Overlatch in Dish

Steel *0,256 kg/St* *Zinc*

L0737/28z - /64z

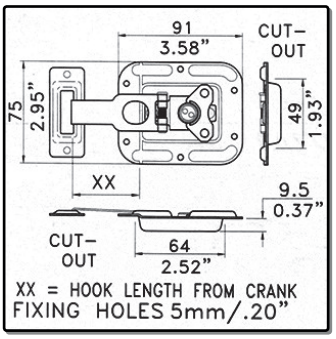

Überwurfcatch klein
Zungenlänge 28-, 43-, 46- oder 64mm

Small Valance Spanning Overlatch in Dish
Hook Length from Offset 28-, 43-, 46-
or 64mm

Steel *0,120 kg/St* *Zinc*

L0747/BP

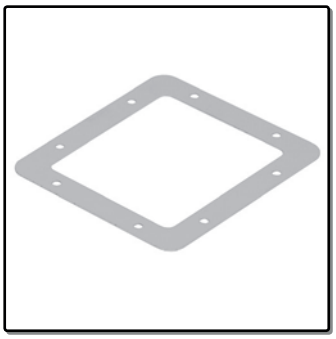

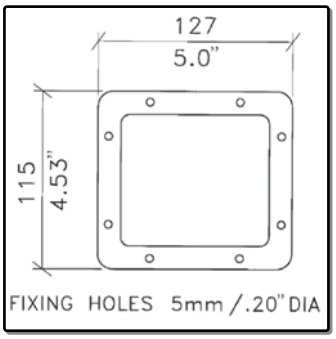

Nietplatte für Überwurfcatche L0747/xx

Backplate for L0747 Serie

Steel *0,040 kg/St* *Raw*

L0737/BP

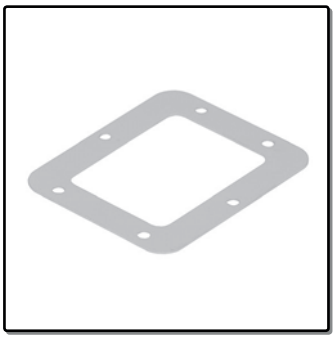

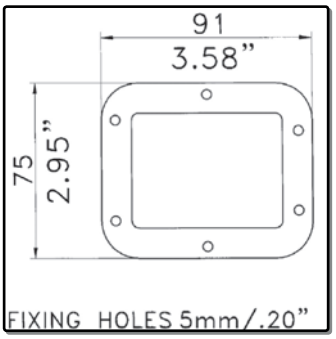

Nietplatte für Überwurfcatche L0737/xx

Backplate for L0737 Serie

Steel *0,040 kg/St* *Raw*

L0747/CP

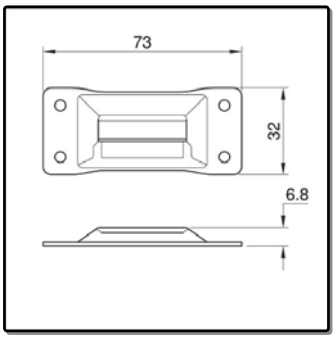

Aufsatzöse für L0747- Serie

Catch Plate for L0747 Serie

Steel *0,013 kg/St* *Zinc*

L0737/CP

Aufsatzöse für L0737- Serie

Catch Plate for L0737- Serie

Steel *0,013 kg/St* *Zinc*

L0965/CP

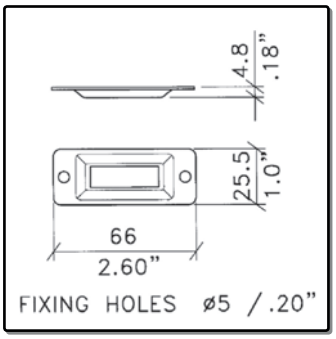

Aufsatzöse für L0737- und L0747 Serie

Catch Plate for L0737- + L0747 Serie

Steel | 0,013 kg/St | Zinc

L090555/CP

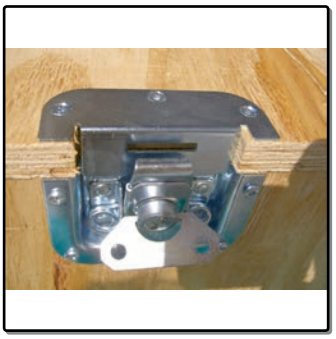

Schließhaken, 90°
passend zu Unterteil L905/915z

Catch Plate for 18mm Wooden Crates
Use with Lockpart L905/915z

1.5mm Steel | 0,054 kg/St | Zinc

D0047z

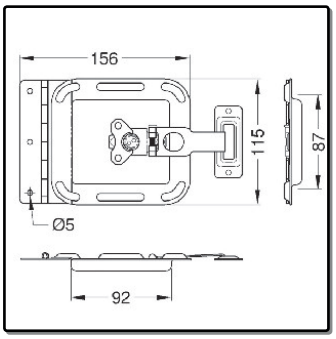

Kabelklappe, Öffnung 87x92mm
(ohne Aufsatzöse)

Cable Door, Opening 87x92mm
(Catch Plate not included)

Steel | 0,300 kg/St | Zinc

D0037z

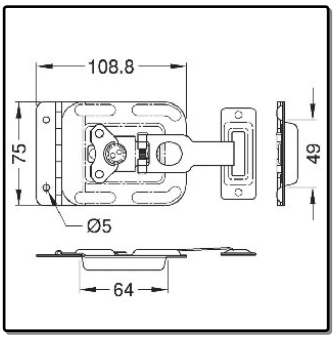

Kabelklappe, Öffnung 49x64mm
(ohne Aufsatzöse)

Cable Door, Opening 49x64mm
(Catch Plate not included)

Steel | 0,220 kg/St | Zinc

L0930

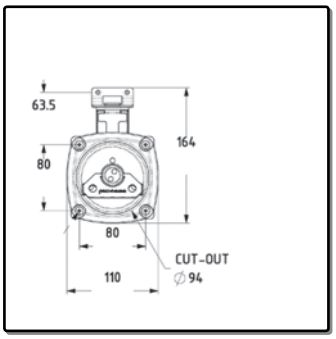

Smartlatch
L0930/07: 7mm tief
L0930/10: 10mm tief
Smartlatch
L0930/07: 7mm deep
L0930/10: 10mm deep

Steel | 0,360 kg/St | Black/Zinc

L0930/Cpz

L0930/Cpz: Aufsatzöse L0930
L0930/LGz: Schutzkappe L0930/CPz

L0930/Cpz: Catch Plate L0930
L0930/LGz: Cover Catchplate L0930/Cpz

Steel | 0,035 kg/St | Zinc

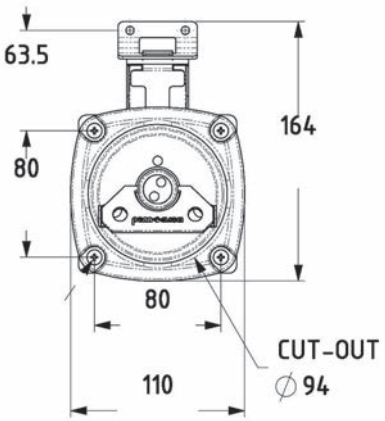

L0930/07z + L0930/10z

Smartlatch

Smartlatch, der neue Einbau-Butterfly. Dieses patentierte, innovative Schloss ist schnell zu montieren, steht nicht vor, ist leicht in der Bedienung und gibt dem Case ein industrielles und hochwertiges Design.
Der Smartlatch kann verwendet werden mit 0452 Deckelrahmen oder mit allen anderen Schließ- und Deckelrahmen-Profilen + ***Einhaköse L0930cpz.***
Befestigung mit M6 Schrauben oder Nieten.
L0930/07z passend zu 7mm Plattenmaterial
L0930/10z passed zu 10mm Plattenmaterial

0452

0520/2

L0930z

Smartlatch

Smartlatch sets a new benchmark for both standard and Overlatch catches. This innovative, patented design is quick to fit, simple in use, and provides a neat, flush appearance to the case exterior, with the latch mechanism protected inside.
Use Smartlatch with lid/basemaker extrusion 0452 with integral keep, or with an internally mounted catch plate **(L0930/cpz)**
Smartlatch is mounted using M6 screws or rivets.
L0930/07z fits 7mm Con Pearl/Wood
L0930/10z fits 10mm Con Pearl/Wood

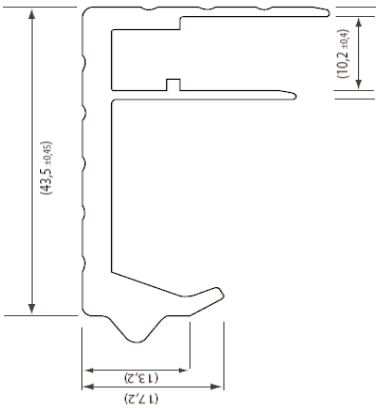

0452

Rahmenprofil 10.2mm mit Schließ-haken passend zu Smartlatch L0930

und Schließprofil 0520/2 mit
Ecken C1346, C1349, 1130

Lid/Basemaker 10.2mm with inete-gral keep for Smartlatch L0930Z.
female extrusion 0520/2 and
Corners C1346, C1349, 1130

Aluminium, 0.780kg/M

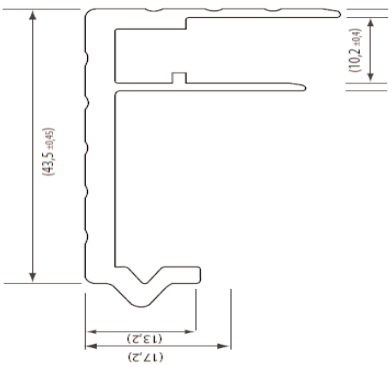

0455

Rahmenprofil 10.2mm

Verwendung mit den Profilen 0450 und 0452,
Schließprofil 0520/2 und
Ecken C1346, C1349, 1130

Lid/Basemaker 10.2mm
for use with extrusion 0450 and 0452,
female lid 0520/2 and
Corners C1346, C1349, 1130

Aluminium, 0.780kg/M

L0935z

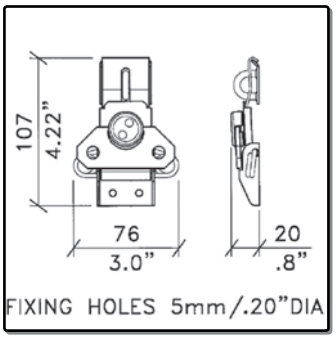

Butterfly groß mit Öse, ohne Schale

Large Butterfly Catch without Dish
Padlocking

Steel *0,185 kg/St* *Zinc*

L0925z

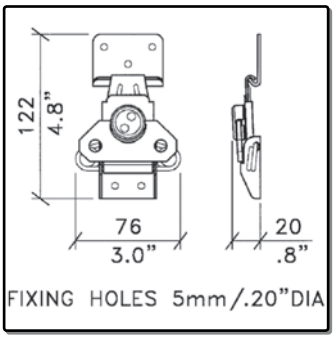

Butterfly Catch groß, ohne Schale

Large Butterfly Catch without Dish

Steel *0,188 kg/St* *Zinc*

L0915z

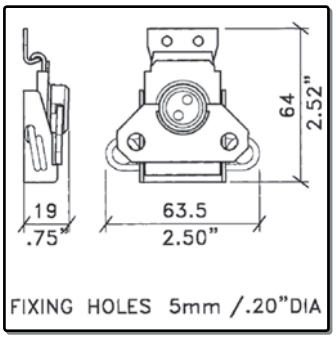

Butterfly Catch medium, ohne Schale

Medium Butterfly Catch without Dish

Steel *0,100 kg/St* *Zinc*

L0914z

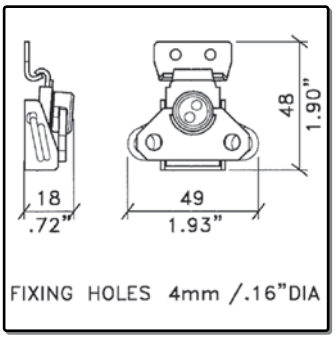

Butterfly Catch klein, ohne Schale

Small Butterfly Catch without Dish

Steel *0,052 kg/St* *Zinc*

L0926z

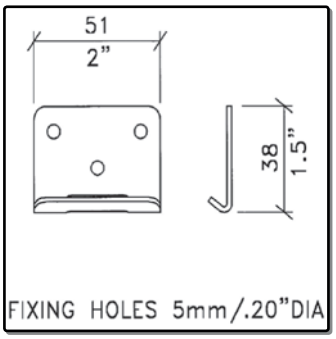

Schließhaken mit Schlitz zu L0925 u.a.

Slotted Striker Plate

Steel *0,031 kg/St* *Zinc*

L0926/90

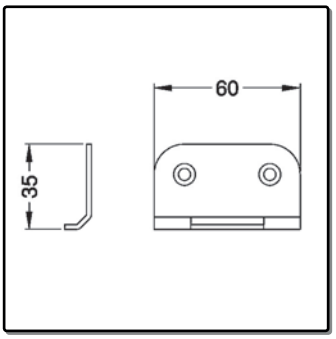

Schließhaken mit Schlitz, 90°

Catch Plate 90°

Steel *0,031 kg/St* *Zinc*

2470

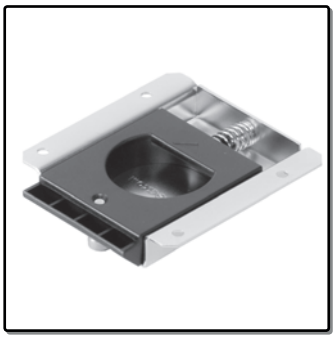

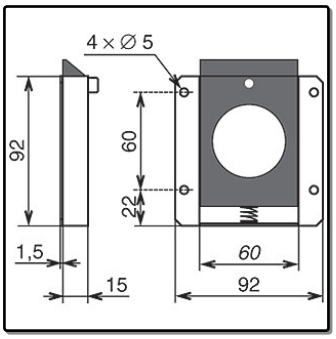

Slam-Lid-Muldenschnappschloss, groß
passend zu Profil 0490

Slam Lid Lock
Fits Extrusion 0490

Steel | 0,150 kg/St | Zinc

2455

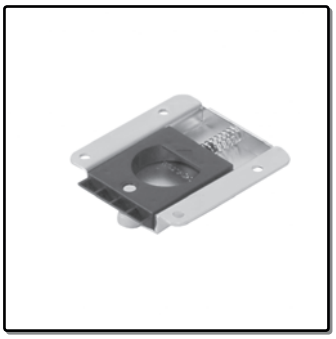

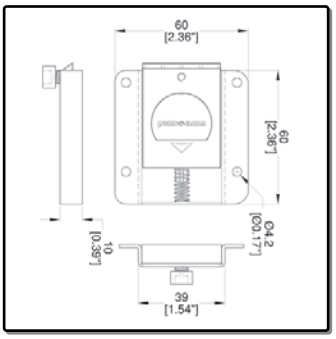

Slam-Lid-Muldenschnappschloß, klein

Mini Slam Lock for Slam-Lid System or
Rackdoors

Steel | Zinc

2472

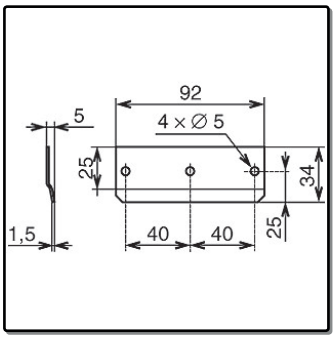

Slam-Lid-Schließhaken
passend zu Profil 0490

Slam Lid Hook
Fits Extrusion 0490

Steel | 0,035 kg/St | Zinc

2480s

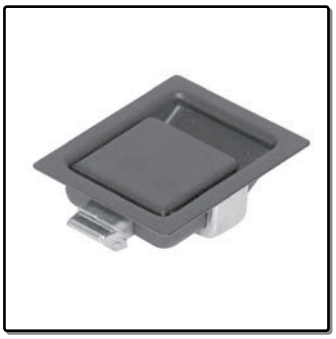

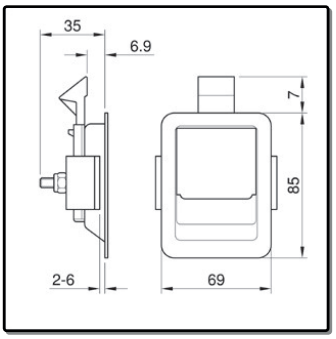

Mulden-Schnappschloß groß

Large Slam Lock Southco

Steel | 0,190 kg/St | Black

L1037z

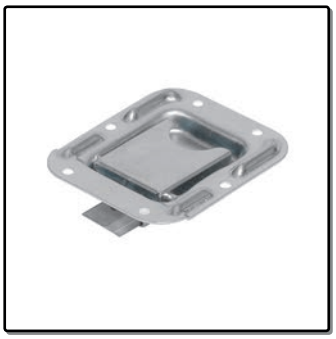

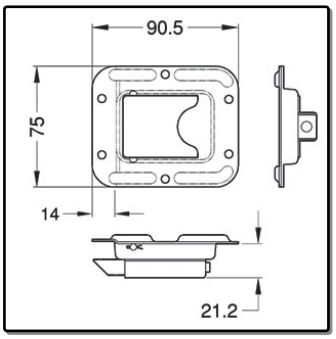

Mulden-Schnappschloß

Small Slam Lock

Steel | 0,180 kg/St | Zinc

2495s

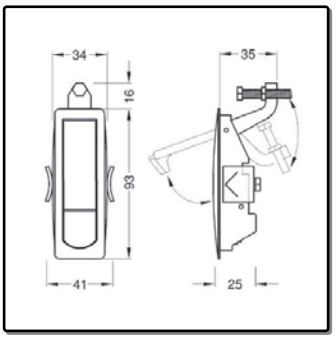

Schloß für Klappen

Black Lever Latch with Flush Trigger

Steel | 0,145 kg/St | Black

L785/790z

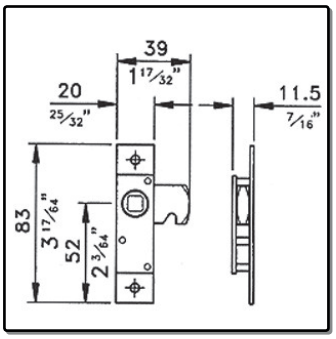

Drehschloß mit Steckschlüssel

Budget Lock with Key

Steel *0,127 kg/St* *Zinc*

LO-1652A/A-42c

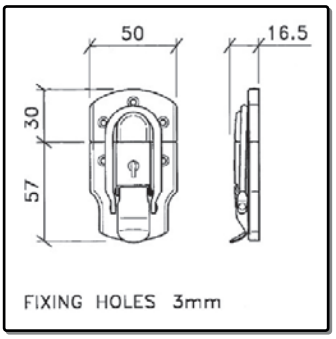

Kofferschloß
Osaka

Drawbolt, Lockable
Osaka

Steel *0,090 kg/St* *Chrome*

LO-1645A/A-42c

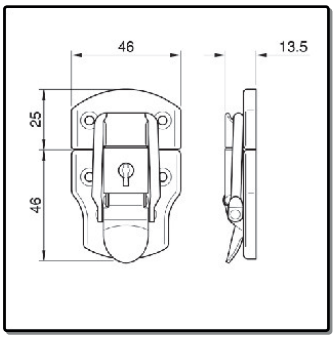

Kofferschloß
Osaka

Drawbolt, Lockable
Osaka

Steel *0,057 kg/St* *Chrome*

LO-1645C/C-42c

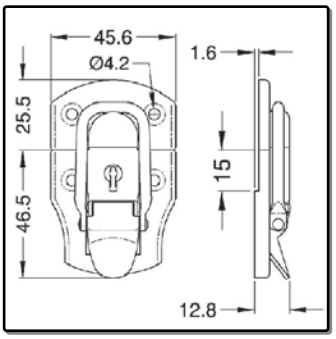

Kofferschloß, gestuft
Osaka

Drawbolt, Lockable
Osaka
Lock Part: Offset

Steel *0,057 kg/St* *Chrome*

LO-1649A/A-42c

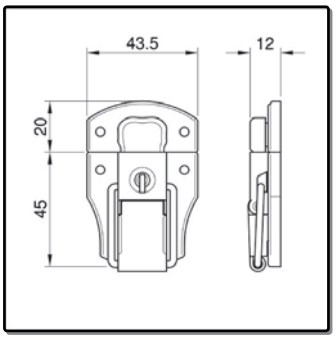

Kofferschloß, Automatik
Osaka
LO-1649/C/C-42c: gestuft 15mm
Drawbolt, Lockable, Automatic
Osaka
LO-1649C/C-42c: offset 15mm

Steel *0,050 kg/St* *Chrome*

LO-1650C/C-42c

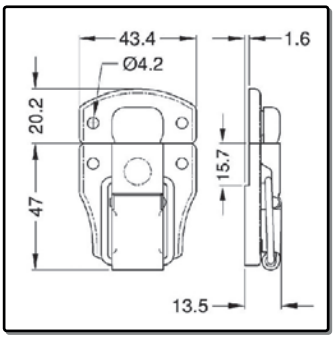

Kofferschloß, Automatik, gestuft
Osaka
"ohne Schlüssel"
Drawbolt, Automatic, without Key
Osaka
Lock Part: Offset

Steel *0,050 kg/St* *Chrome*

LO-1648A/A-33c

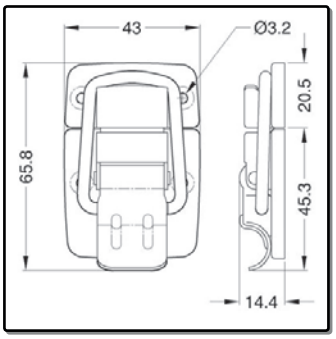

Kofferschloß
Osaka

Drawbolt
Osaka

Steel | 0,090 kg/St | Chrome

L0575c - L0575k

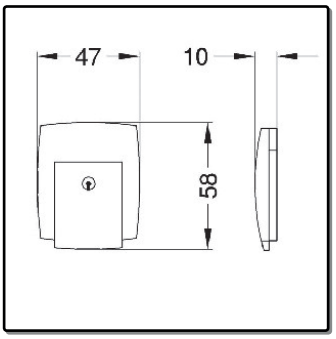

Kofferschloß groß, abschließbar
L0575c: chrome
L0575k: schwarz
Large Draw Bolt, Lockable
L0575c: Chrome
L0575k: Black

Diecast Alu | 0,090 kg/St | Chrome or Black

2270c

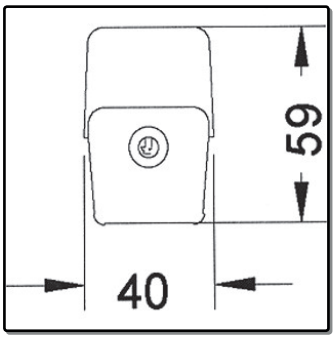

Schnappschloß "Uniclip"

Lockable Draw Bolt "Uniclip"

Steel | 0,061 kg/St | Chrome

L0565z

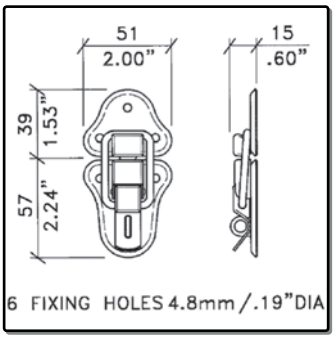

Schnappschloß groß
mit Öse

Large Draw Bolt
Padlocking

Steel | 0,068 kg/St | Zinc or Nickle

L0560z

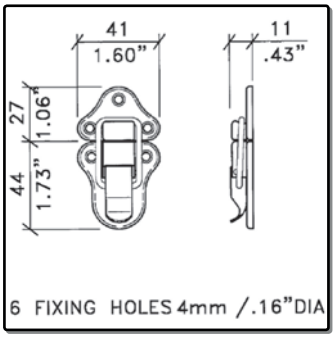

Schnappschloß klein

Small Draw Bolt

Steel | 0,030 kg/St | Zinc or Nickle

LO-1621A/A-41c

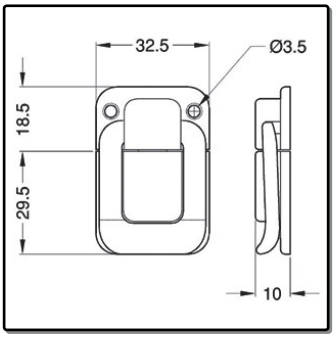

Kofferschloß
Osaka

Drawbolt
Osaka

Steel | 0,026 kg/St | Chrome

LO-1614A/A-42c

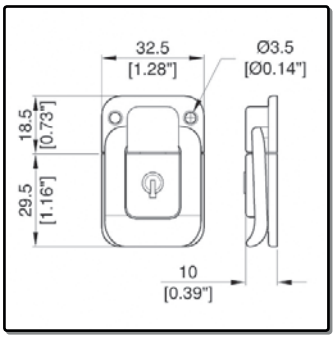

Kofferschloß
Osaka

Drawbolt, Lockable
Osaka

Steel *0,050 kg/St* *Chrome*

L0559s

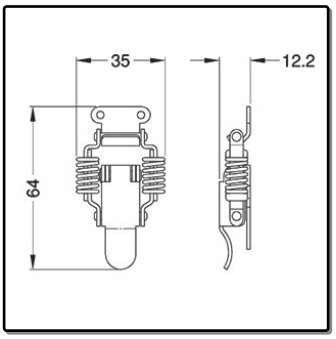

Schnappschloß klein

Sprung Draw Bolt

Stainless *0,033 kg/St* *Stainless*

LE-1099/1

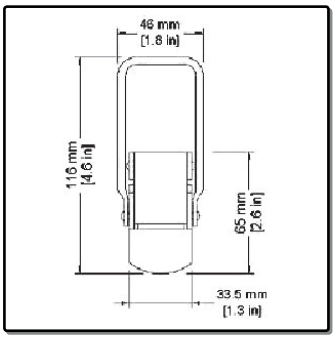

Schloß
ohne Schließhaken

Drawlatch Heavy Duty
no Striker Plate

Steel *0,138 kg/St* *Zinc*

LE-1097/2

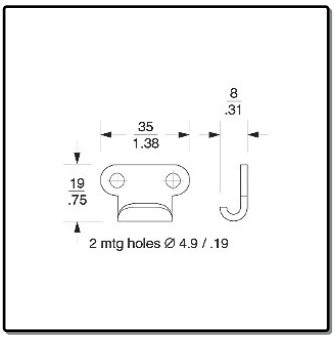

Schließhaken zu LE-1099/1

Striker Plate for use with LE-1099/1

Steel *0,020 kg/St* *Zinc*

LE-8338/1

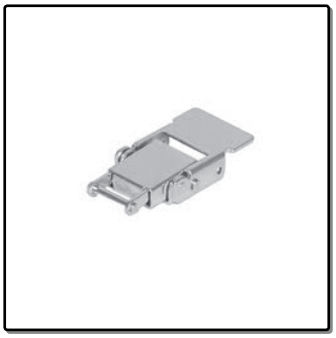

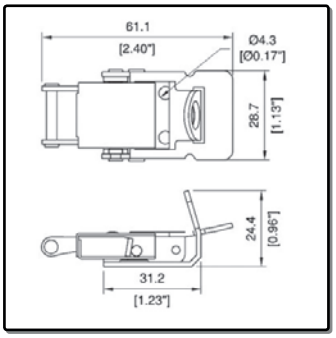

Schloß, Öse
ohne Schließhaken

Drawlatch
no Striker Plate

Steel *0,065 kg/St* *Zinc*

LE-8332/2

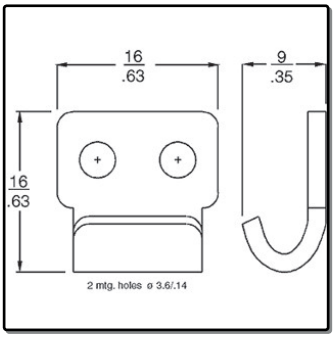

Schließhaken zu LE-8338/1

Striker Plate mates LE-8338/1

Steel *0,005 kg/St* *Zinc*

L0355k

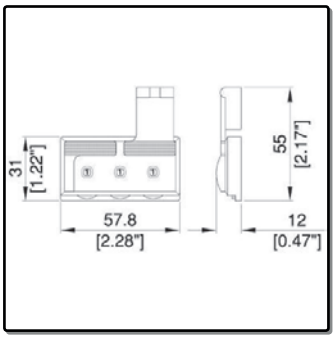

Zahlenschloßpärchen

Combination Lock
Pair

Steel *0,140 kg/P.* *Black*

LE-4880

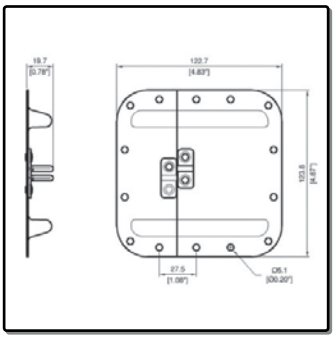

Rammschutz für Vorhängeschlösser

Surface Mount Padlockable Dish

Steel *0,193 kg/St* *Zinc*

2590

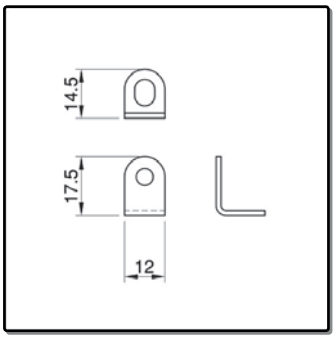

Öse für Schlösser / Plomben

Padlocking Bracket (Single)

Steel *0,003 kg/St* *Zinc*

L0922-TSA

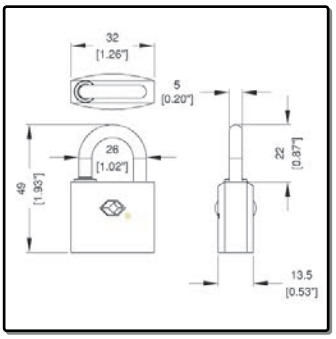

Vorhängeschloß TSA

TSA Certified Padlock

Scharnierband - Piano Hinges

P1350 - P1350P

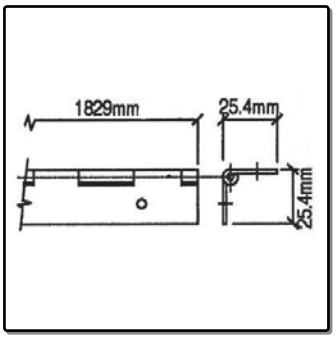

Scharnierband 51mm
P1350: ohne löcher
P1350P: gelocht
Piano Hinge 51mm
P1350: plain
P1350P: prepunched

Aluminium | *0,311 kg/m* | *Alu*

3020

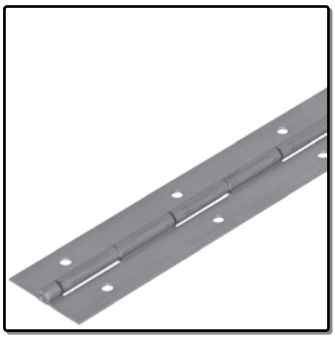

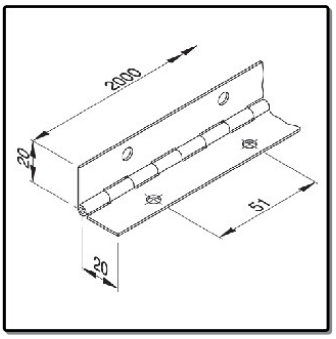

Scharnierband 40mm

Piano Hinge, 40mm open

1.5mm Steel | *0,490 kg/m* | *Zinc*

H14001

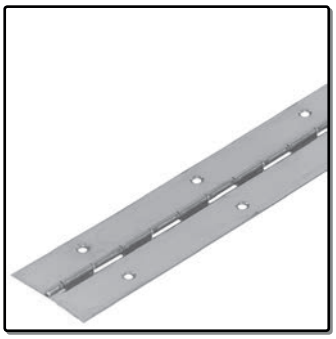

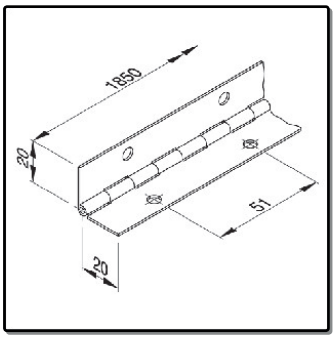

Scharnierband 40mm

Piano Hinge, 40mm open

1.0mm Steel | *0,160 kg/m* | *Nickel*

P1321Pn

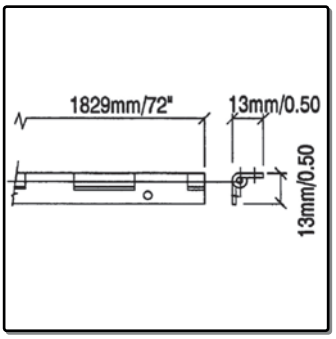

Scharnierband 25mm

Piano Hinge 25mm open

Steel | *0,450 kg/m* | *Nickel*

P81506z

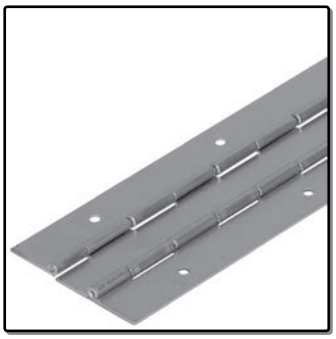

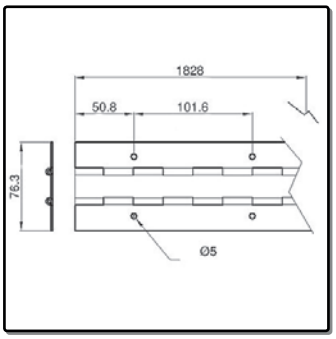

Zweifach-Scharnierband 76.3mm

Double Piano Hinge 76.3mm

1.2mm Steel | *1,113 kg/m* | *Zinc*

P1361 - P1363

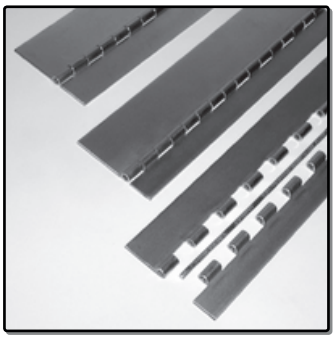

Scharnierband, kombinierbar
P1361: 38mm, P1362: 51mm, P1363: 76mm

Piano hinge with Removable Pin
P1361: 38mm, P1362: 51mm, P1363: 76mm

Steel | *0,311 kg/m* | *Zinc*

P50030/22/R1z

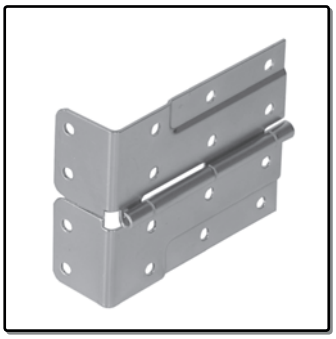

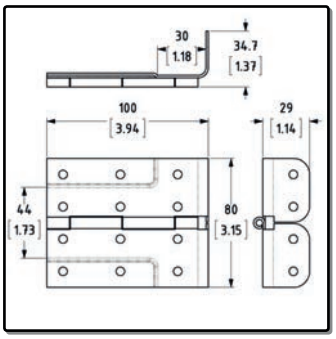

Scharnierstück im integr. L-Winkel B1121
IR2, gestuft für Schließprofil

Hinge/Brace B1121z
Hinge with Brace B1121z
Hinge with Offset for extra Strength

1.5mm Steel *0,130 kg/St* *Zinc*

P50030/22/R5z

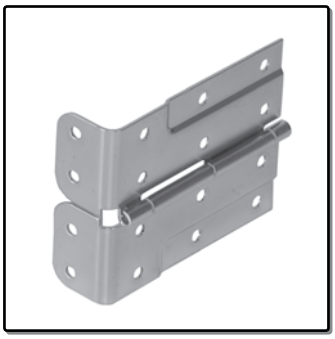

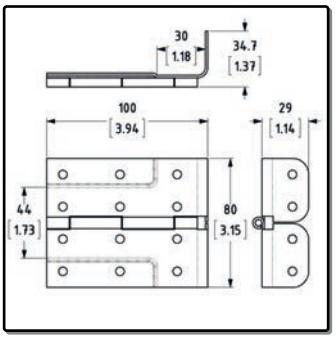

Scharnierstück im integr. L-Winkel B1130
IR5, gestuft für Schließprofil

Hinge/Brace B1130
Hinge with Brace B1130
Hinge with Offset for extra Strength

1.5mm Steel *0,130 kg/St* *Zinc*

PE-1906 - 1908

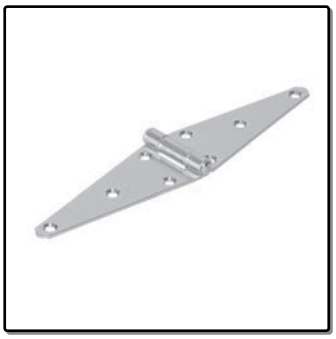

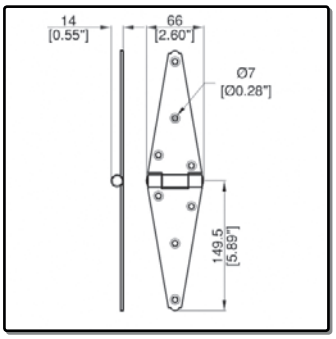

Kistenscharniere
PE-1906: 66x150mm
PE-1908: 74x203mm
Strap Hinges
PE-1906: 66x150mm
PE-1908: 74x203mm

Steel *0,420kg/St.* *Zinc*

PE-1903 - 1904

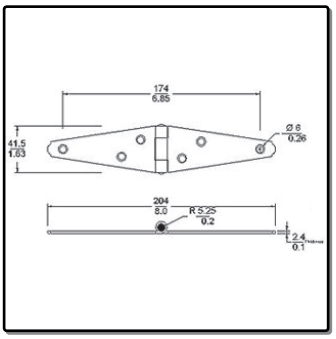

Kistenscharniere
PE-1903: 32x75mm
PE-1904: 32x100mm
Strap Hinges
PE-1903: 32x75mm
PE-1904: 32x100mm

Steel *0,120kg/St.* *Zinc*

LE-2698

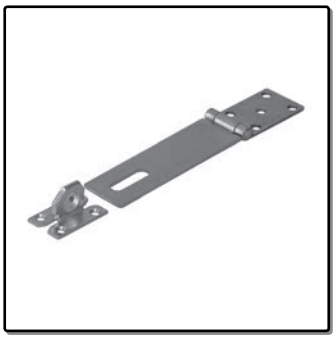

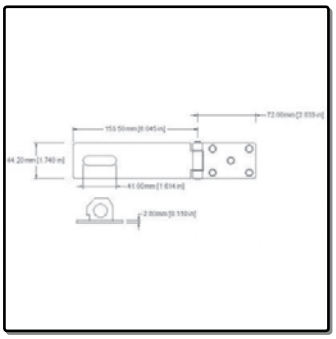

Sicherheits-Überfalle
154x45mm

Heavy Duty Padlock Hasp
154x54mm

1.5mm Steel *0,280 kg/St* *Zinc*

PE-1544

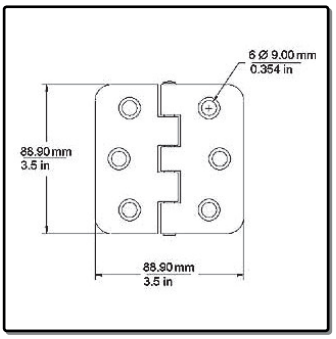

Schweres Scharnier 89x89mm

Heavy Duty Hinge
89x89mm

Steel *0,196 kg/St* *Zinc*

Scharniere / Aufsteller - Hinges /Lid Stays

P81570z

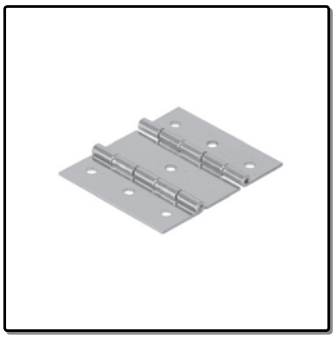

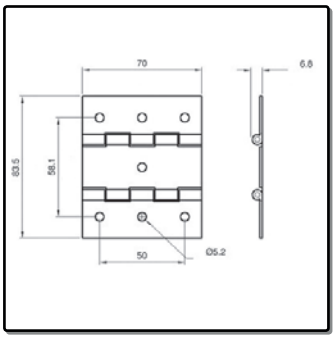

Zweifach-Scharnierstück 70x84mm
zu Zweifach-Scharnierband P81506z

Double Hinge 70x84 for use with P81506z

Steel *0,085 kg/St* *Zinc*

PE-1535

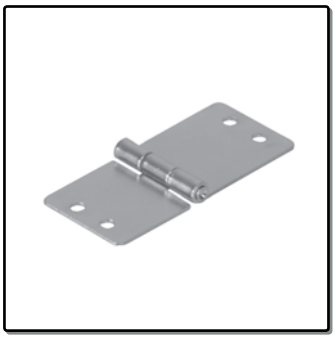

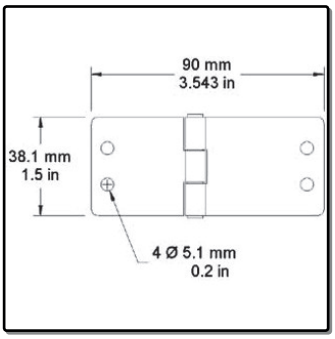

Scharnierstück 38x90mm

Hinge
38x90mm

1.5mm Steel *0,048 kg/St* *Zinc*

P0610n

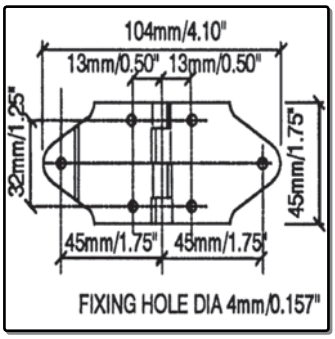

Scharnierstück 45x104mm

Hinge
45x104mm

Steel *0,070 kg/St* *Nickel*

P0635n

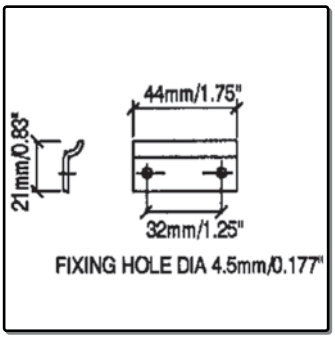

Scharnier-Aufstellstop
passend zu P0610n

Hinge Stop
Fits P0610n

Steel *0,010 kg/St* *Nickel*

3022

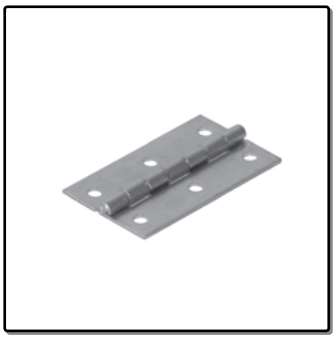

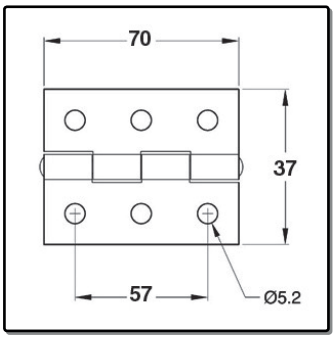

Scharnierstück 70x37mm, zu 3020

Hinge 70x40mm for use with 3020

1.5mm Steel *0,042 kg/St* *Zinc*

3021

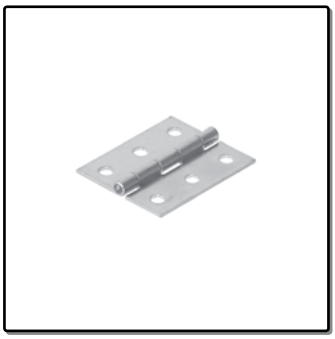

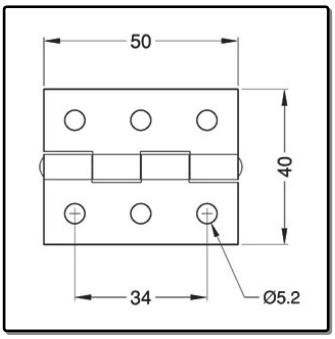

Scharnierstück 50x40mm zu 3020

Hinge 50x40mm for use with 3020

1.5mm Steel *0,030 kg/St* *Zinc*

PE-1522

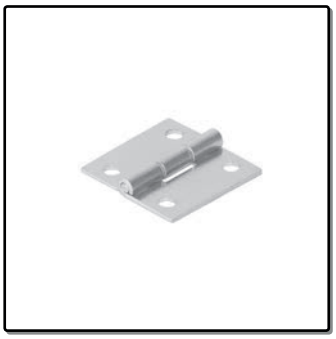

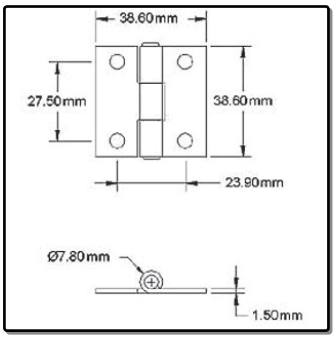

Scharnierstück 39x39mm

Hinge
39x39mm

1.5mm Steel *0,030 kg/St* *Zinc*

PO-4440-41c

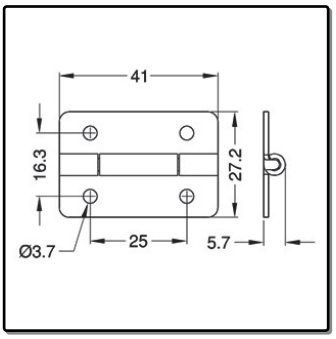

Scharnierstück 27x40mm
Osaka

Hinge
Osaka, 27x40mm

Steel *0,016 kg/St* *Chrome*

P2558z

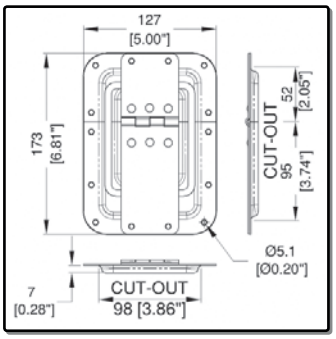

Einbauaufsteller groß mit Außenbügel
gestuft, mit integr. Scharnierstück

Large Recessed Lid Stay with Offset
Fixed Hinge mounted in Dish

Steel *0,422 kg/St* *Zinc*

D0554z

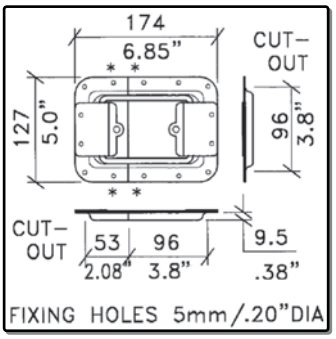

Einbauaufsteller groß mit Außenbügel

Large Recessed Lid Stay

1.5mm Steel *0,370 kg/St* *Zinc*

D0558z

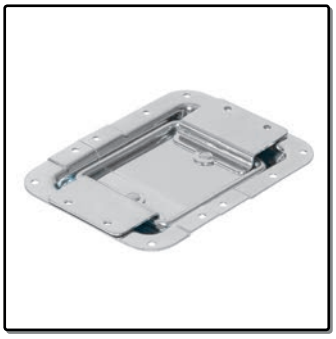

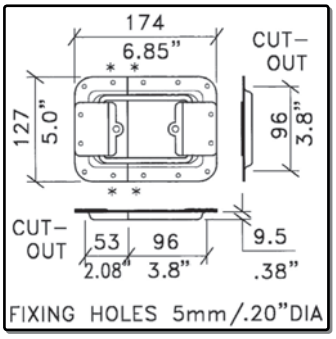

Einbauaufsteler groß mit Außenbügel
gestuft

Large Recessed Lid Stay with Offset

1.5mm Steel *0,370 kg/St* *Zinc*

P2597z

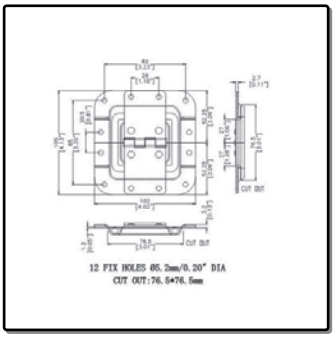

Einbauaufsteler medium mit Außenbügel
gestuft, mit integr. Scharnierstück

Medium Recessed Lid Stay with Offset
Fixed Hinge mounted in Dish

Steel *0,218 kg/St* *Zinc*

Scharniere / Aufsteller - Hinges /Lid Stays

D0593z

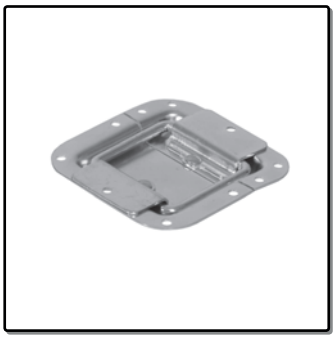

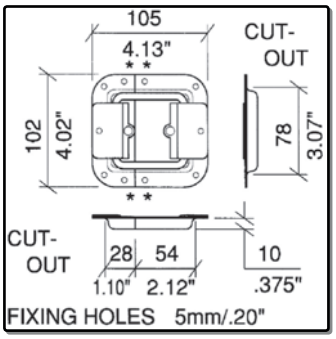

Einbauaufsteller medium mit Außenbügel

Medium Recessed Lid Stay

1.5mm Steel *0,212 kg/St* *Zinc*

D0597z

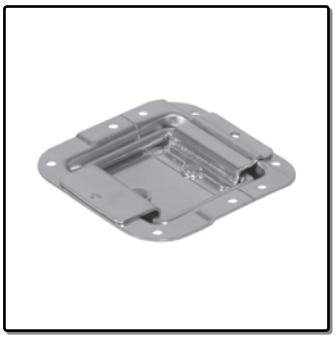

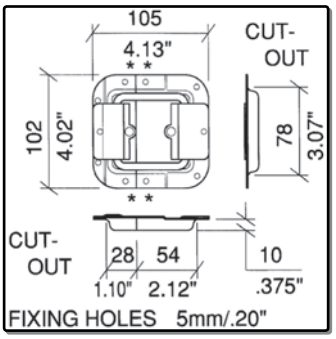

Einbauaufsteller medium mit Außenbügel gestuft

Medium Recessed Lid Stay with Offset

1.5mm Steel *0,210 kg/St* *Zinc*

P1993z

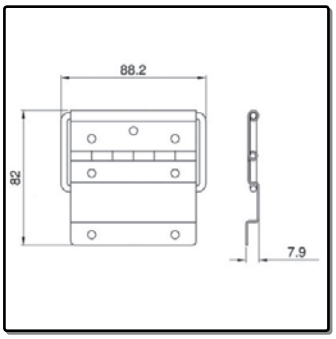

Aufstellscharnier
82x88mm

Strut Hinge
82x88mm

Steel *0,010 kg/St* *Zinc*

P1995ez

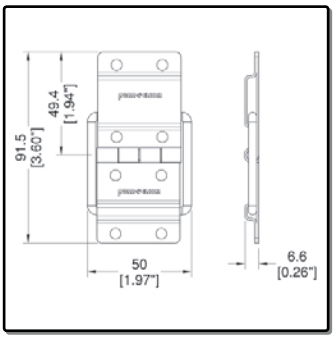

Aufstellscharnier
40x95mm

Strut Hinge
40x95mm

Steel *0,080 kg/St* *Zinc*

P1990

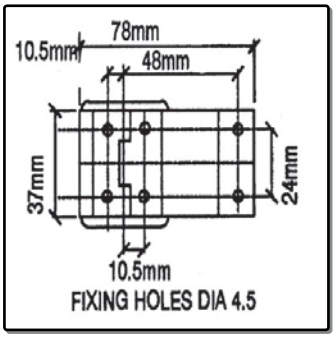

Aufstellscharnier 40x80mm
P1990z: verzinkt
P1990c (PO-4470-42c): verchromt (Osaka)
Strut Hinge 40x80mm
P1990z: zinc plated
P1990c (PO-4470-42c): Chrome (Osaka)

Steel *0,045 kg/St* *Zinc or Chrome*

PO-4468-42c

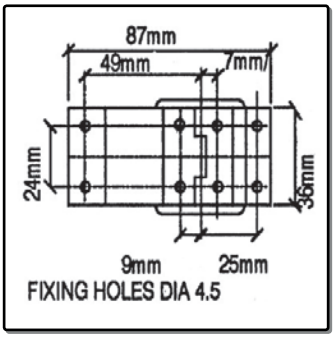

Aufstellscharnier
Osaka, 40x80mm

Strut Hinge
Osaka, 40x80mm

Steel *0,050 kg/St* *Chrome*

PO-4467-42c

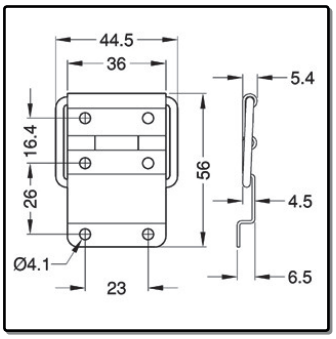

Aufstellscharnier
Osaka, 35x55mm

Strut Hinge
Osaka, 35x55mm

Steel *0,032 kg/St* *Chrome*

PO-4477-42c

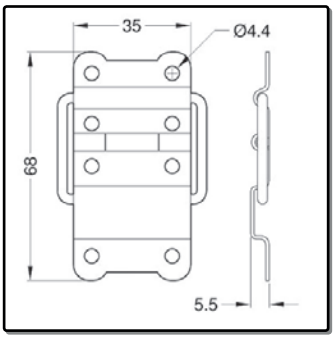

Aufstellscharnier
Osaka, 40x68mm

Strut Hinge
Osaka, 40x68mm

Steel *0,032 kg/St* *Chrome*

P1325n

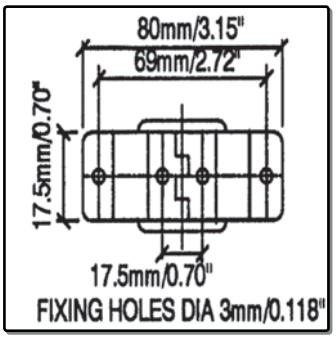

Aufstellscharnier
20x80mm

Strut Hinge
20x80mm

Steel *0,025 kg/St* *Nickel*

P1325-25n

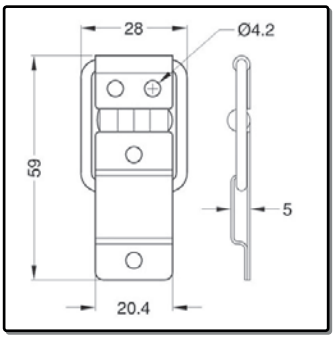

Aufstellscharnier
20x28mm

Strut Hinge
20x28mm

Steel *0,025 kg/St* *Nickel*

P1945

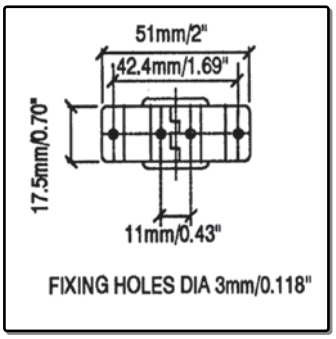

Aufstellscharnier
20x51mm

Strut Hinge
20x51mm

Steel *0,012 kg/St* *Nickel*

PO-4270-32c

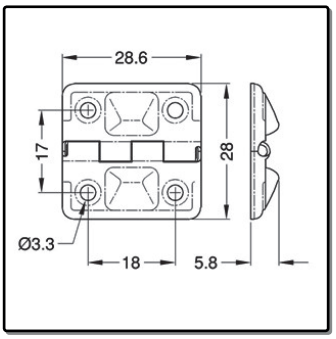

Aufstellscharnier
Osaka, 28x28mm

Strut Hinge
Osaka, 28x28mm

Steel *0,006 kg/St* *Chrome*

Scharniere / Aufsteller - Hinges /Lid Stays

P06217z

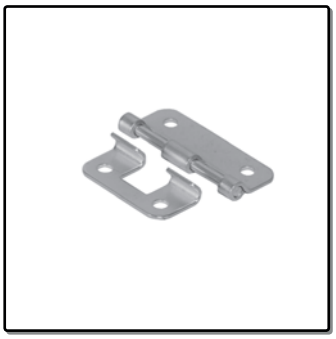

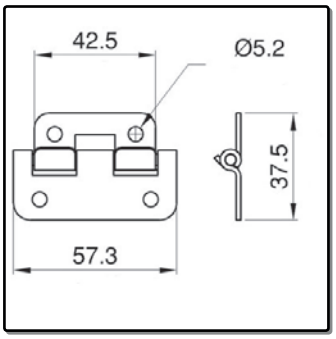

Aushängescharnier, 180°

Lift Off Hinge, Separating with 180°

Steel *0,030 kg/St* *Zinc*

P0625z

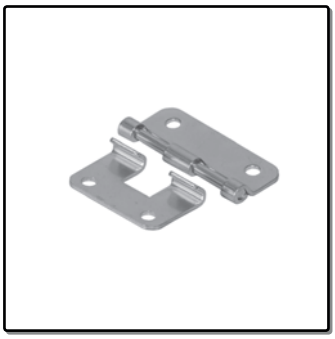

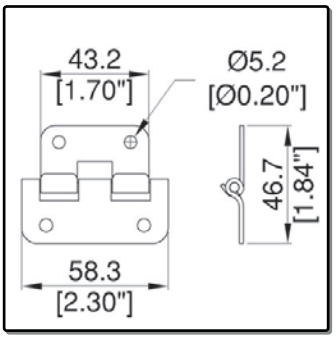

Aushängescharnier, 180°

Lift Off Hinge, Separating with 180°

Steel *0,048 kg/St* *Zinc or Black*

3050

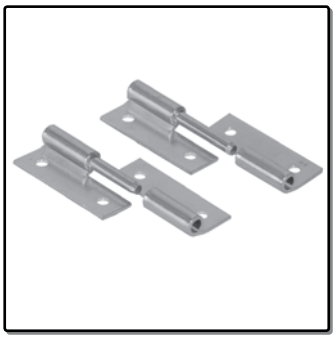

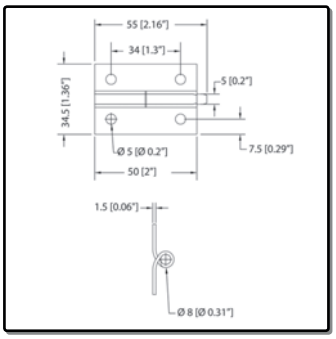

Aushängescharnierpaar, 90°

Pair of Lift Off Hinges, Separating 90°

2.0mm Steel *0,072 kg/St* *Zinc*

P1235

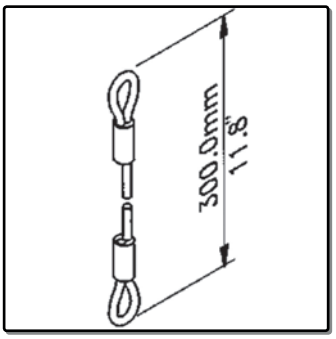

Stahlseil-Deckelhalter, 30cm

Lid Fixing Steel, 30cm

Steel *0,008 kg/St* *Zinc*

P1246n

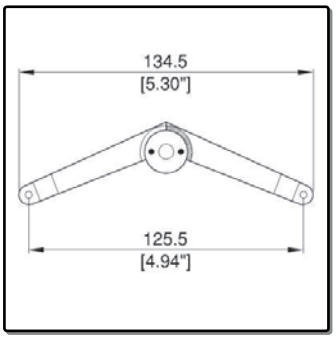

Scheren-Deckelaufsteller 134mm

Lidstay 134mm

Steel *0,024 kg/St* *Nickel*

P1247z

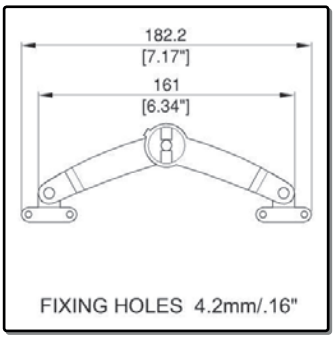

Scheren-Deckelaufsteller 182mm

Lidstay 182mm

Steel *0,070 kg/St* *Zinc*

H7165-10z

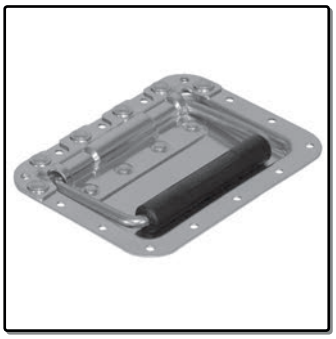

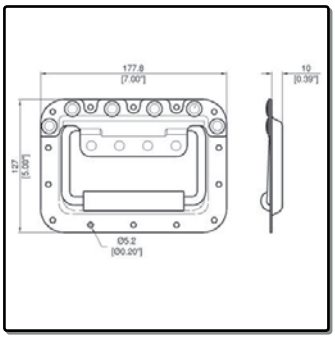

Stahlklappgriff groß in Einbauschale
Greifgummi 19mm

Large Recessed Flip Handle
19mm Grip

Steel *0,570 kg/St* *Zinc or Black*

H7150Ez

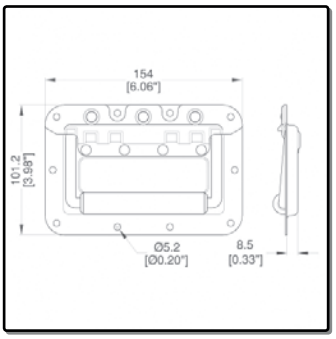

Stahlklappgriff medium in Einbauschale
Lochbild und Fräsmaße kompatibel zu
Fremdprodukten
Medium Recessed Flip Handle
Cut out and hole pattern compatible to
external products

Steel *0,377 kg/St* *Matt Zinc*

H7159z

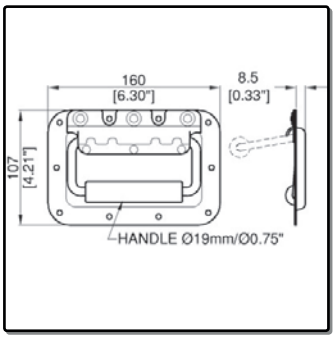

Stahlklappgriff medium in Einbauschale
Greifgummi 19mm

Medium Recessed Flip Handle
19mm Grip

Steel *0,370 kg/St* *Zinc or Black*

H7159L

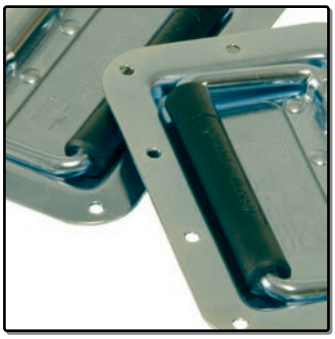

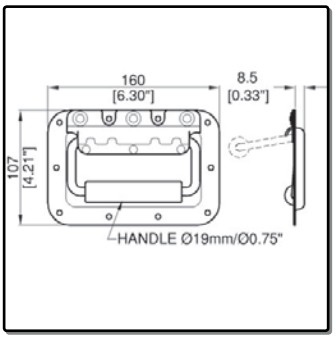

Stahlklappgriff mit Ihrem Firmen-Logo
Min. Abnahme 500 St.

Medium Recessed Flip Handle with your
Company Logo. Min order 500 pcs

Steel *0,327 kg/St* *Zinc or Black*

H1050

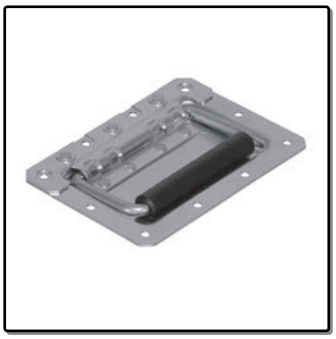

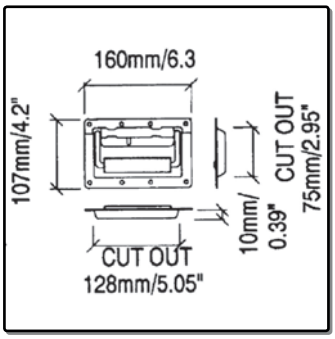

Stahlklappgriff medium in Einbauschale

Medium Recessed Flip Handle

1.2mm Steel *0,328 kg/St* *Zinc or Black*

H7148z

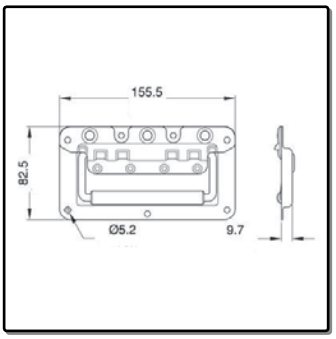

Stahlklappgriff klein in Einbauschale

Small Recessed Flip Handle

Steel *0,284 kg/St* *Zinc*

H7149z

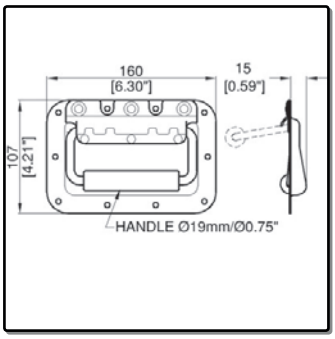

Stahlklappgriff medium in Einbauschale
vertiefter Schale

Medium Recessed Flip Handle
Tear Drop Dish

Steel *0,325 kg/St* *Zinc*

H7151s

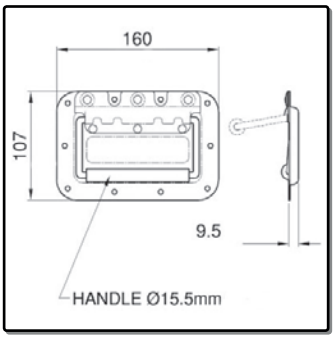

Stahlklappgriff medium in Einbauschale
- Edelstahl - 430BA
Greifgummi 15mm
Medium Recessed Flip Handle
Stainless Steel, Grade 430BA
15mm Grip

Stainless *0,348 kg/St* *Stainless*

H2751

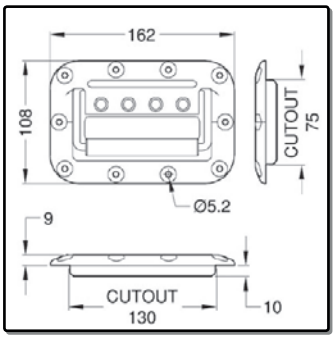

Klappgriff medium in ABS-Einbauschale

Medium Recessed Flip Handle, ABS Dish

ABS *0,199 kg/St* *Black*

H1065/BP

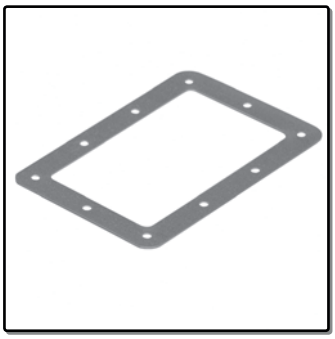

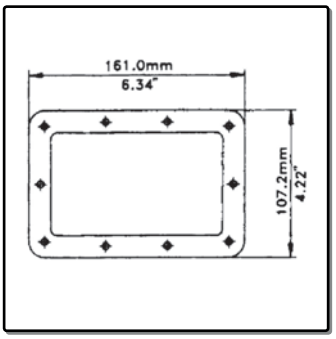

Nietrahmen zu H7165-10z

Backplate for H7165-10z

0.9mm Steel *0,049 kg/St* *Raw*

H1085 - H1085k

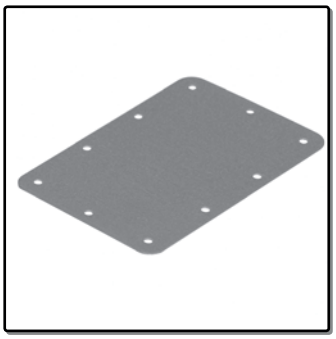

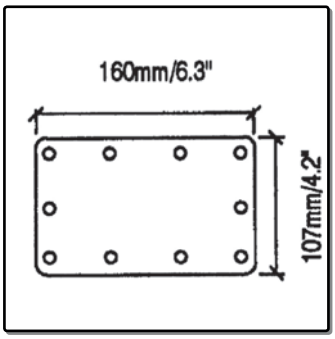

Nietplatte zu H1050, H7151 und H7159
H1085: Roh
H1085k: Schwarz
Backplate for H1050,H7151 and H7159
H1085: Raw
H1085k: Black

0.9mm Steel *0,124 kg/St* *Zinc or Black*

H1906

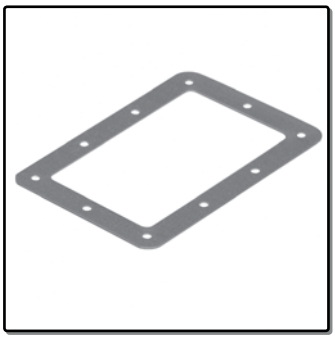

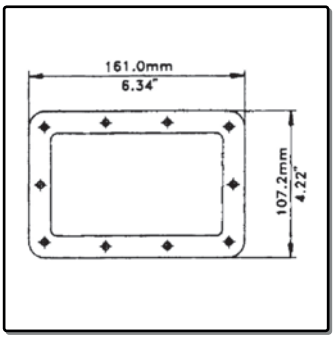

Nietrahmen zu H1050/H7151 und H7159

Backplate for H1050/H7151 and H7159

0.9mm Steel *0,049 kg/St* *Raw*

H7150/85

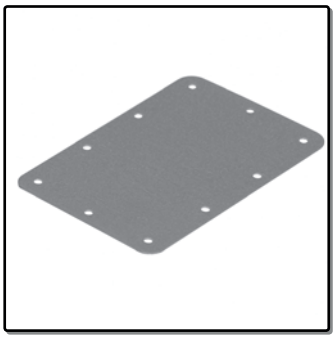

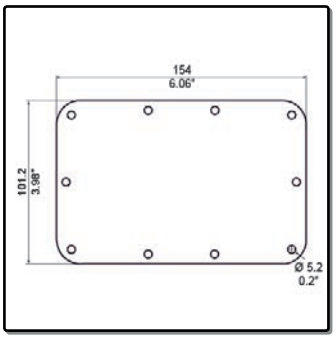

Nietplatte zu H7150Ez

Backplate for H7150Ez

0.9mm Steel *0,049 kg/St* *Raw or Black*

H7150/06

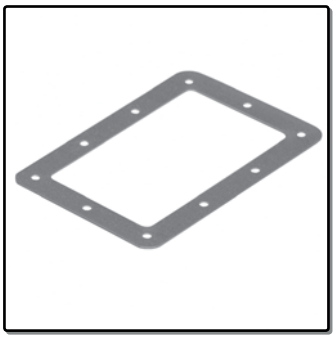

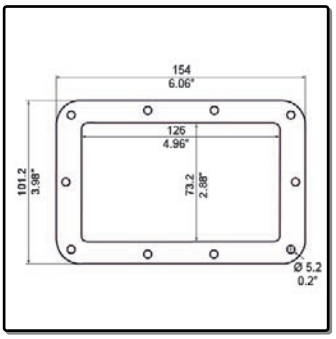

Nietrahmen zu H7150Ez

Backplate for H7150Ez

0.9mm Steel *0,049 kg/St* *Raw*

H4051z

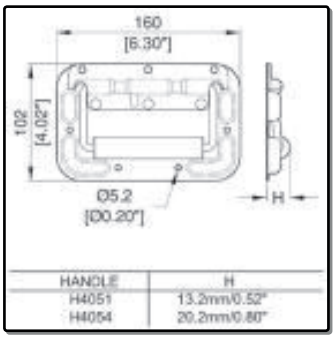

Aufsatz-Stahlklappgriff mit Rammschutz

Surface Flip Handle, Protected

1.2mm Steel *0,364 kg/St* *Zinc*

H1053z

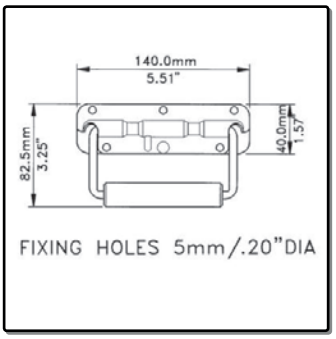

Aufsatzklappgriff

Surface Flip Handle

1.5mm Steel *0,238 kg/St* *Zinc or Black*

HE-2341AL

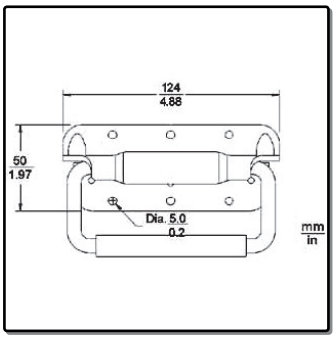

Aufsatzklappgriff aus Aluminium

Aluminium Surface Flip Handle

Aluminium *0,106 kg/St* *Aluminium*

H1078z

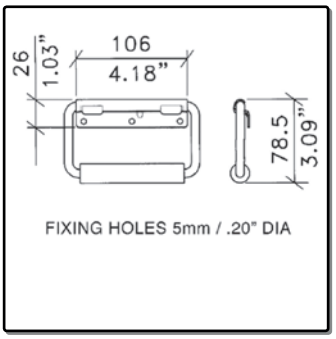

Aufsatzklappgriff

Surface Flip Handle

1.5mm Steel *0,220 kg/St* *Zinc or Black*

H1030R

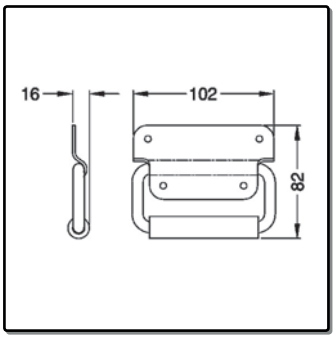

Aufsatzgriff, ungefedert
mit Greifgummi

Surface Handle with Rubber Grip
No Spring

2.0mm Steel *0,180 kg/St* *Zinc*

H1030z

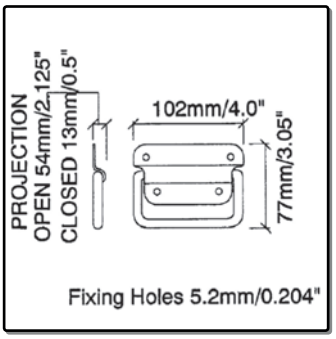

Aufsatzgriff, ungefedert

Surface Handle
No Spring

2.0mm Steel *0,180 kg/St* *Zinc*

HE-2457

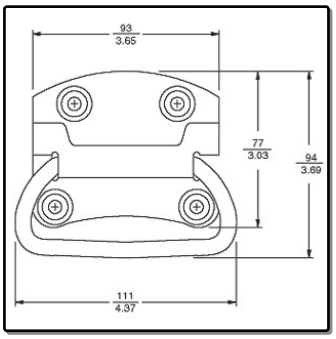

Aufsatzgriff, ungefedert

Surface Handle
No Spring

Steel *0,150 kg/St* *Zinc*

H1080

Aufsatzklappgriff aus Aluminium
116x56mm

Surface Handle with Spring
Aluminium
116x56mm

Aluminium *0,088 kg/St* *Raw*

H1079

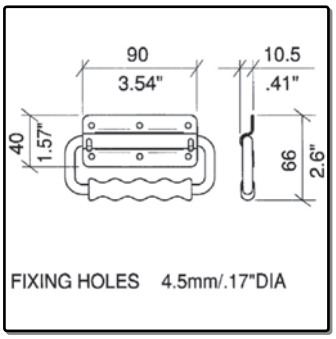

Aufsatzklappgriff

Surface Handle

Aluminium *0,060 kg/St* *Alu.*

H1025

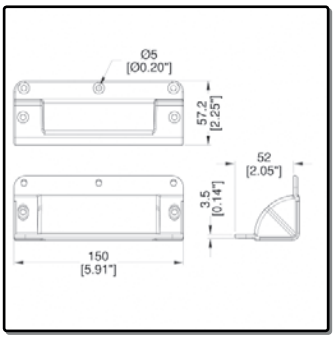

Kanteneinbaugriff, gestuft 35x35mm
Zum leichteren Handling von kleineren
Cases oder von abnehmbaren Deckeln
Corner Handle, Offset 35mm
Easy handling of small cases or
removable lids

Die Cast/Pl *0,106 kg/St* *Black*

H2001

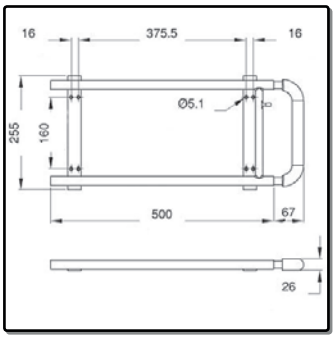

Aufsatz-Teleskopgriff HD
500x255mm

Heavy Duty Surface Pull Out Handle

Steel *2,200 kg/St* *Zinc*

4512

2 Auszüge Trolley-Griff mit Rollen
230mm Breite, abnehmbar
Trolley 165x375mm, bis 580mm ausziehbar
2 Stage Trolley Handle with Castors
Width 230mm
Trolley 165x375mm, Extended till 580mm

Steel *1,000 kg/St* *Black*

4515

2 Auszüge Trolley-Griff mit Rollen
335mm Breite, abnehmbar
Trolley 165x375mm, bis 580mm ausziehbar
2 Stage Trolley Handle with Castors
Width 335mm, 3 Stage
Trolley 165x375mm, Extended till 580mm

Steel *1,000 kg/St* *Black*

4080

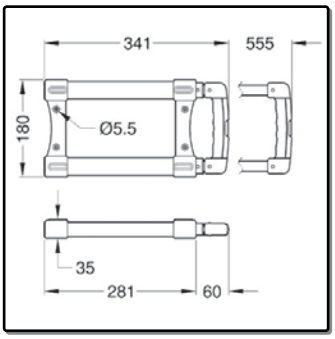

Trolley-Griff
555x180mm

Trolley Handle
555x180mm, 5 Stage

Steel *0,760 kg/St* *Black*

H2000 - H2017

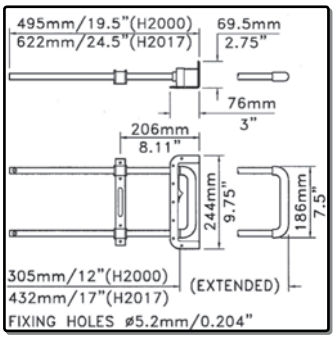

Einbau-Teleskopgriff
H2000: 495mm + 265mm
H2017: 622mm + 431mm
Resecced Pull Out Handle
H2000: 495mm + 265mm
H2017: 622mm + 431mm

Steel/ABS *1,060 kg/St* *Black*

H4116

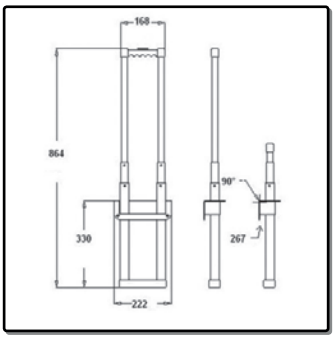

Einbau-Teleskopgriff
330mm - 864mm

Internal Mount Telescopic Trolley Handle
330mm - 864mm, 4 Stage

Steel *1,000 kg/St* *Black*

Griffe - Handles

4200

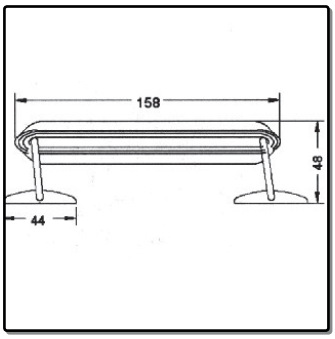

Ledergriff mit elastischer Innenstrebe
mit vernickelten Nietböckchen

Leather Handle, Elastique Plastic inside

Leather/ABS *0,084 kg/St* *Black; Fittings: Zinc*

4210

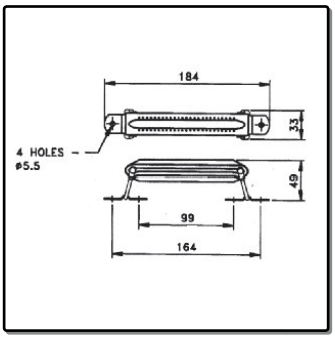

Ledergriff (Vollrindleder)
mit vernickelten Nietböckchen

Solid Leather Handle

Leather *0,086 kg/St* *Black*

H1008

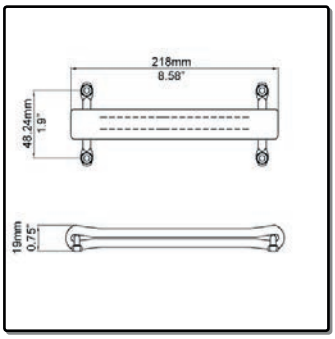

Ledergriff schwarz
mit vernickelten Nietböckchen

Black Leather Handle
Nickle Fittings

Leather *0,086 kg/St* *Black*

H1008t

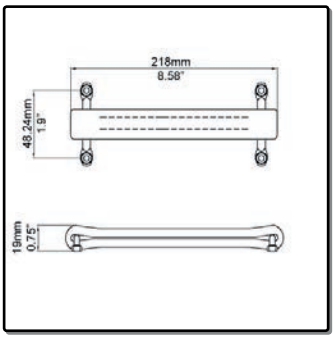

Ledergriff hellbraun
mit vernickelten Nietböckchen

Light Brown (TAN) Leather Handle
Nickle Fittings

Leather *0,086 kg/St* *Light Brown*

H1008br

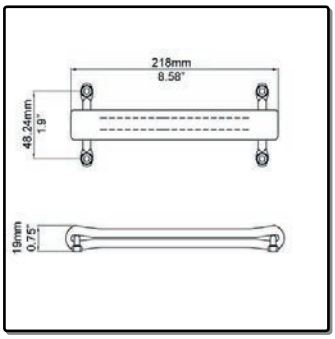

Ledergrif dunkelbraun
mit vernickelten Nietböckchen

Dark Brown Leather Handle
Nickle Fittings

Leather *0,086 kg/St* *Dark Brown*

H1431 - H1432

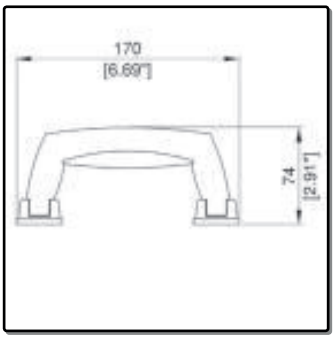

Attachékoffer-Griff
H1431: schwarz
H1432: chromfarben/schwarz (abgebildet)
Briefcase Swivel Handle
H1431: Black
H1431: Matt Chrome/Black (Picture)

ABS/Steel *0,100 kg/St* *Matt Chrome/Black*

4245

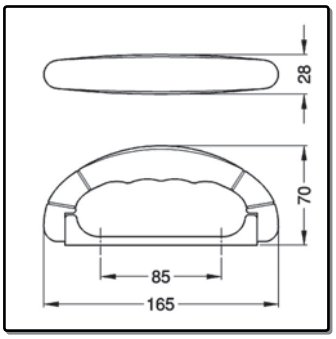

Attachékoffer-Griff

Briefcase Swivel Handle

ABS | 0,102 kg/St | Black

4230

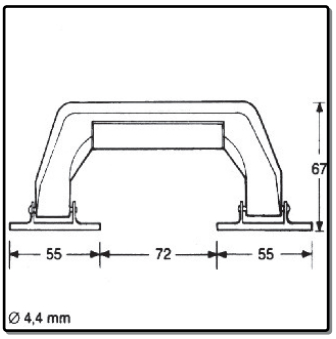

Attachékoffer-Griff

Briefcase Swivel Handle

ABS | 0,070 kg/St | Black; Fittings: Zinc

HO-7960Tk

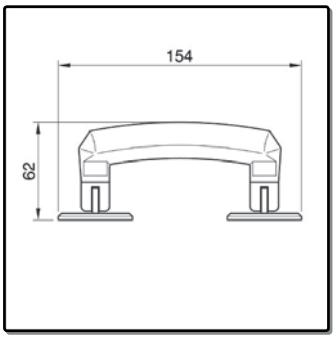

Attachékoffer-Griff
Osaka

Briefcase Swivel Handle
Osaka

ABS/Steel | 0,110 kg/St | Black

HO-7960k

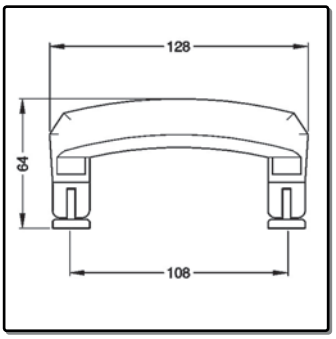

Attachékoffer-Griff
Osaka

Briefcase Swivel Handle
Osaka

ABS/Steel | 0,110 kg/St | Black

H1423

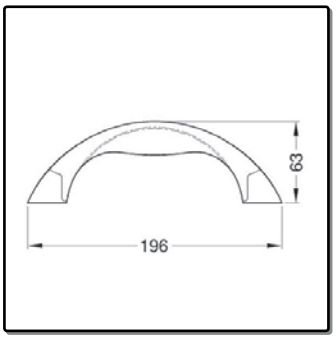

Attachékoffer-Griff

Briefcase Swivel Handle

ABS | 0,098 kg/St | Black

H1425

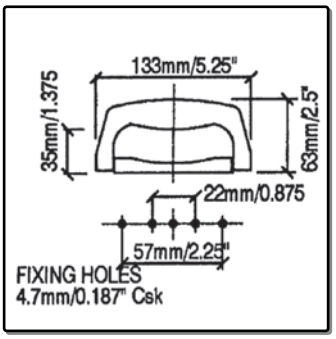

Attachékoffer-Griff

Briefcase Swivel Handle

ABS | 0,062 kg/St | Black

Griffe - Handles

H1430

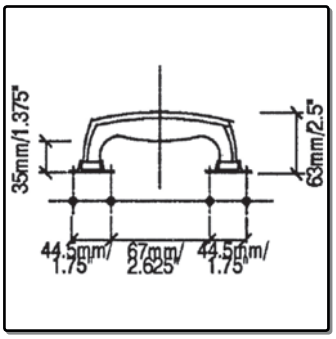

Attachékoffer-Griff

Briefcase Swivel Handle

ABS *0,038 kg/St* *Black; Fittings: Nickel*

4260

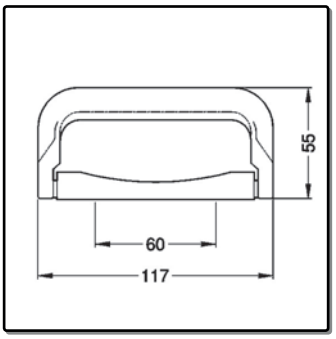

Attachékoffer-Griff

Briefcase Swivel Handle

ABS *0,040 kg/St* *Black*

H1190

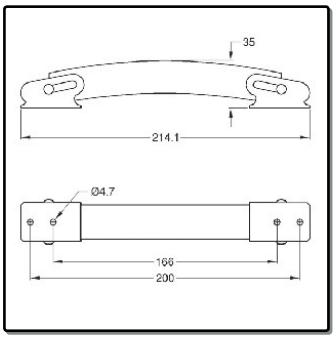

Attachékoffer-Griff "Hip-Hop"

Briefcase Handle "Hip-Hop"

Steel *0,180 kg/St* *Nickel*

R1265/3Uk

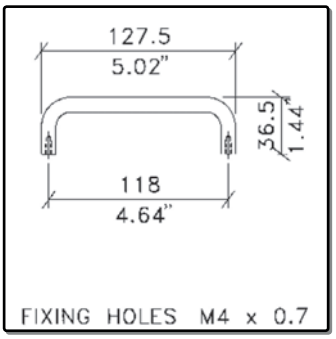

Stahl-Bügelgriff 127.5mm

3U Rack Panel Handle

Steel *0,070 kg/St* *Black*

H1010k - H1010z

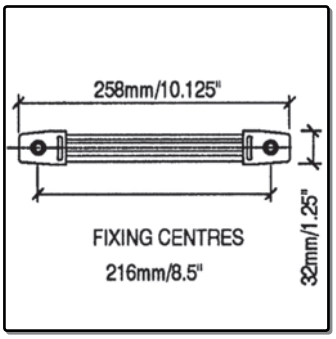

Riemengriff mit Stahl-Endkappen
H1010k: Endkappen Schwarz
H1010z: Endkappen Zink
Strap Handle with Steel Endcaps
H1010k: Black Endcaps
H1010z: Zinc Plated Endcaps

Steel/PVC *0,126 kg/St* *Zinc or Black*

4319

Befestigungssatz zu H1010z + H1010k

Mounting Set for H1010z + H1010k

Steel *0,012 kg/St* *Zinc*

H8012

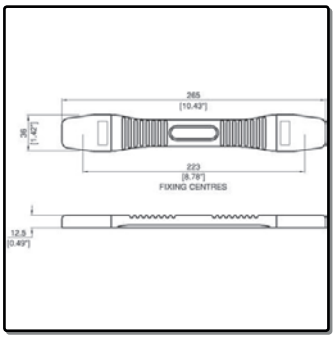

Riemengriff mit ABS-Endkappen

Strap Handle with ABS Endcaps

Steel/PVC *0,132 kg/St* *Black*

H1195

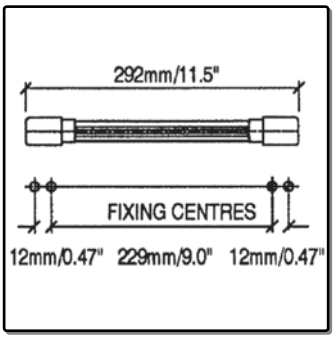

Riemengriff mit Stahl-Endkappen

Strap Handle with Steel Endcaps

Steel/PVC *0,116 kg/St* *Bl/chrome*

H1009/01

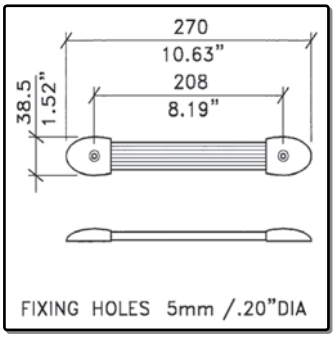

Riemengriff mit ABS-Endkappen

Straphandle with Plastic Endcaps

Steel/PVC *0,066 kg/St* *Black*

H1013

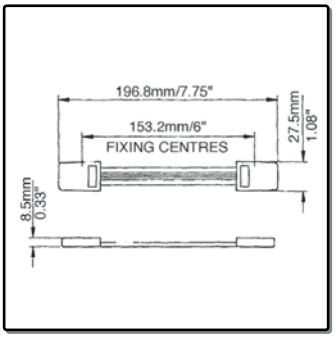

Riemengriff mit ABS-Endkappen

Straphandle with Plastic Endcaps

Steel/PVC *0,040 kg/St* *Black*

Rollen - Castors

W0985

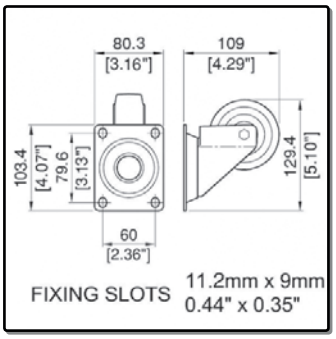

Lenkrolle 100mm, blau, mit Stop
Penn Elcom, Belastbarkeit: 200kg

Blue Swivel Castor 100mm + Brake
Penn Elcom
Carrying weight per Wheel 200kg

Steel/Rubb. *1,370 kg/St* *Zinc/Blue*

W0990

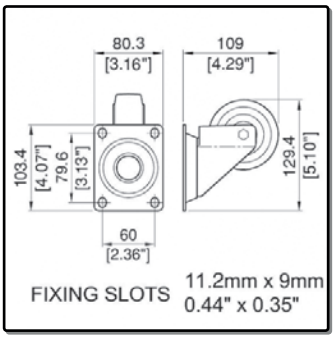

Lenkrolle 100mm, blau, Penn Elcom
Belastbarkeit: 200kg

Blue Swivel Castor 100mm, Penn Elcom
Carrying weight per Wheel 200kg

Steel/Rubb. *1,076 kg/St* *Zinc/Blue*

W0975

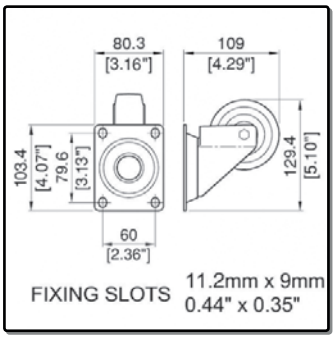

Bockrolle 100mm, blau, Penn Elcom
Belastbarkeit: 200kg

Blue Fixed Castor 100mm, Penn Elcom
Carrying weight per Wheel 200kg

Steel/Rubb. *0,820 kg/St* *Zinc/Blue*

W9980

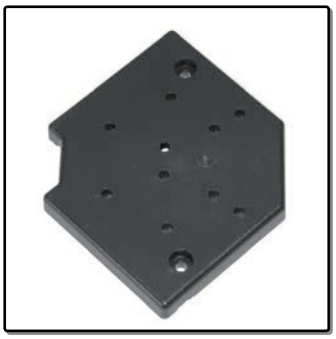

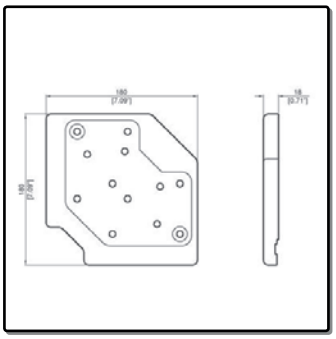

Montageplatte für 100mm-Rollen

Three Way Castor Plate For 100mm Castors

Polyamid *0,256 kg/St* *Black*

W0094

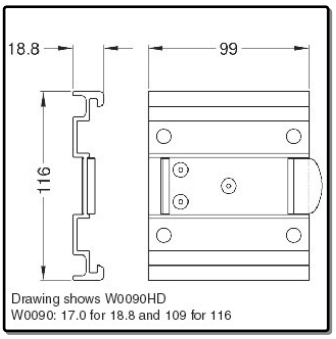

Steckschiene passend zu W0985 und W0990

Castor Plate to suit W0985 and W0990

Aluminium *0,165 kg/St* *Alu*

W0985/80

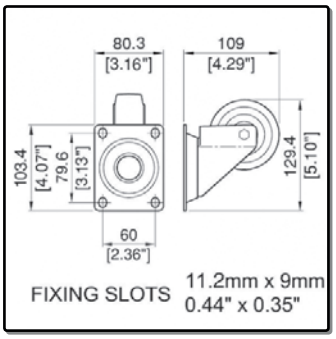

Lenkrolle 80mm, blau, mit Stop, PE

Blue Sw. Cast. 80mm+Brake, Penn Elcom

Steel/Rubb. *0,800 kg/St* *Blue*

W0990/80

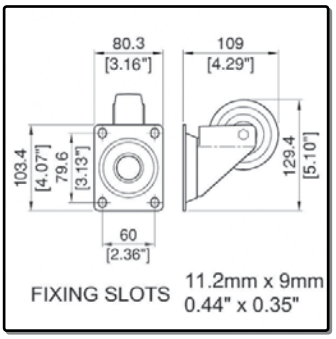

Lenkrolle 80mm, blau, Penn Elcom

Blue Swivel Castor 80mm, Penn Elcom

Steel/Rubb. *0,600 kg/St* *Blue*

W0975/80

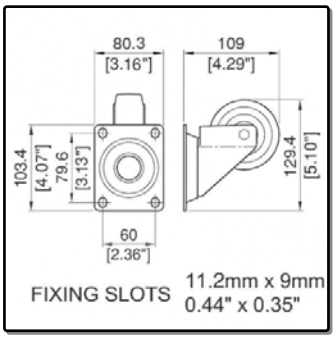

Bockrolle 80mm, blau, Penn Elcom

Blue Fixed Castor 80mm, Penn Elcom

Steel/Rubb. *0,600 kg/St* *Blue*

W0093

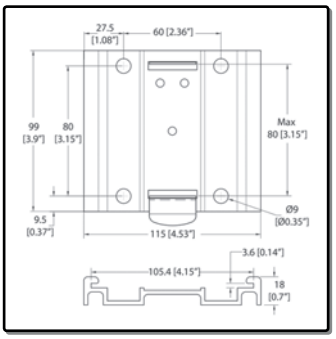

Steckschiene passend zu W0985/80 und W0990/80

Castor Plate to suit W0985/80 and W0990/80

Aluminium *0,165 kg/St* *Alu*

5114

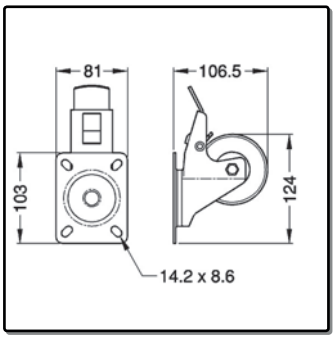

Lenkrolle 80mm, schwarz, mit Stop
Penn Elcom

Black Swivel Castor 80mm + Brake
Penn Elcom

Steel/Rubb. *1,200 kg/St* *Zinc; Wheel: Black*

5104

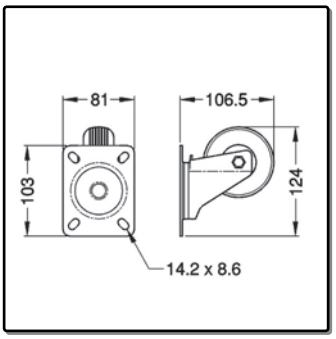

Lenkrolle 80mm, schwarz
Penn Elcom

Black Swivel Castor 80mm
Penn Elcom

Steel/Rubb. *0,625 kg/St* *Zinc; Wheel: Black*

Rollen - Castors

5210

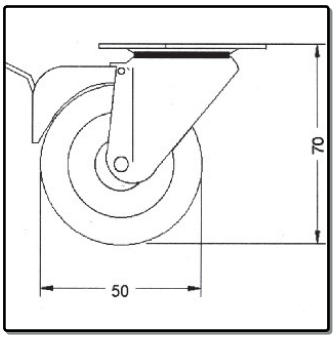

Lenkrolle 50mm mit Stop

Grey Swivel Castor 50mm + Brake

Steel/Rubb. *0,247 kg/St* *Zinc; Wheel: Grey*

5200

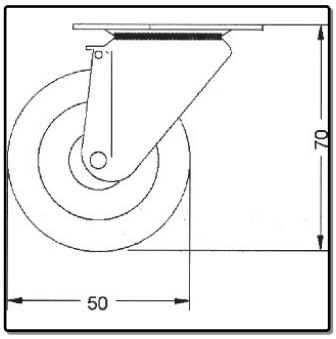

Lenkrolle 50mm

Grey Swivel Castor 50mm

Steel/Rubb. *0,219 kg/St* *Zinc; Wheel: Grey*

5220

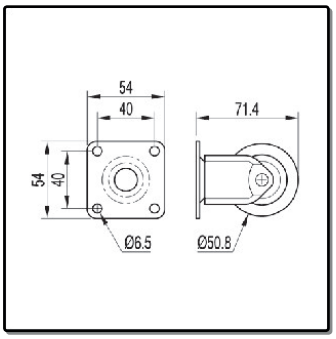

Bockrolle 50mm

Grey Fixed Castor 50mm

Steel/Rubb. *0,150 kg/St* *Zinc; Wheel: Grey*

W2100z

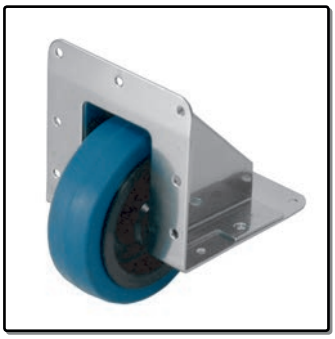

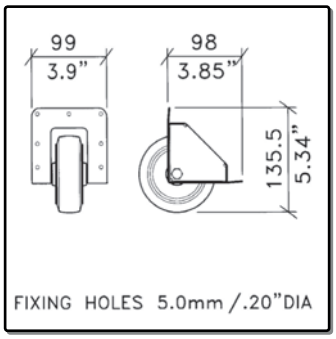

Einbau-Kantenrolle, 100mm

Edge Mount Castor 100mm

Steel/Rubb. *0,750 kg/St* *Zinc; Wheel: Blue*

W8675/HD

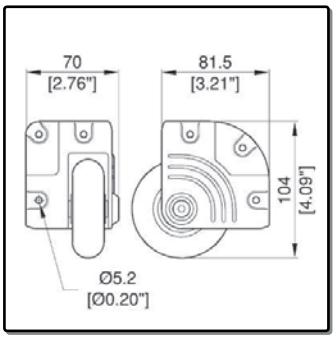

HD Einbau-Eckrolle, Blau, 75mm

Corner Castor 75mm, HD Blue Castor

Steel/Rubb. *0,560 kg/St* *Zinc*

W8675z

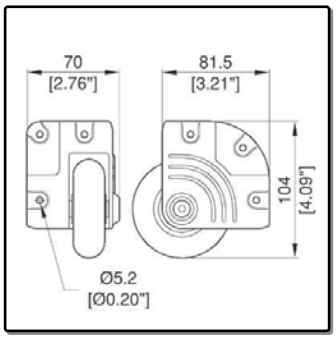

Einbau-Eckrolle, 75mm

Corner Castor 75mm

Steel/Rubb. *0,500 kg/St* *Zinc*

W8375z

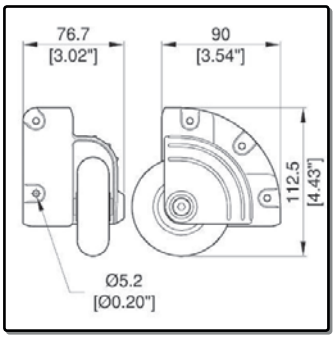

Aufbau-Eckrolle, 75mm

Corner Castor 75mm, Surface Mounted

Steel/Rubb. *0,496 kg/St* *Zinc*

W8075z

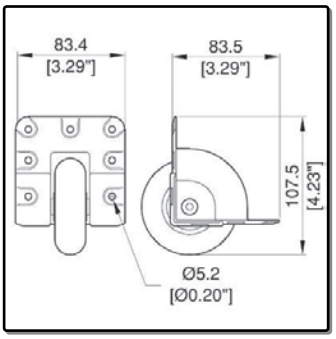

Einbau-Kantenrolle, 75mm

Edge Mount Castor 75mm

Steel/Rubb. *0,500 kg/St* *Zinc*

NC2W65/HK

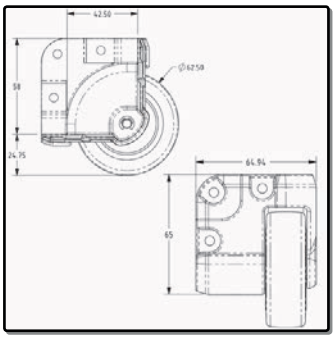

N-Case 2 Einbau-Kantenrolle, 65mm

N-Case 2 Edge Mount Castor 65mm

Die Cast Al *0,500 kg/St* *Black*

W2060 - W2060k

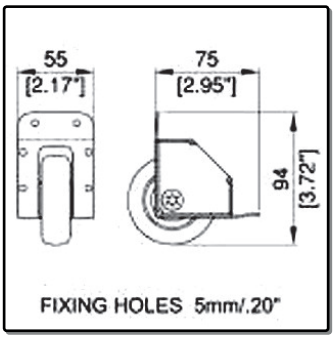

Einbau-Kantenrolle, 64mm
W2060: verzinkt
W2060k: schwarz
Edge Mount Castor 64mm
W2060: Zinc
W2060: Black

Steel/Rubb. *0,250 kg/St* *Zinc or Black; Wheel: Black*

W8255

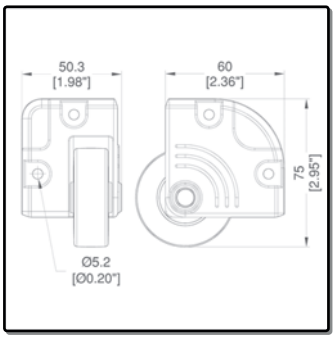

Einbau-Eckrolle 50mm

Corner Castor 50mm

Steel/Rubb. *0,184 kg/St* *Grey*

W2001

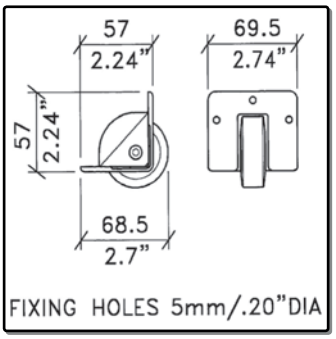

Einbau-Kantenrolle, 50mm

Edge Mount Castor 50mm

Steel/Rubb. *0,150 kg/St* *Black; Wheel: Grey*

Rollen - Castors

A5250

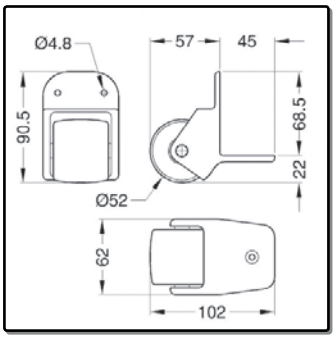

Aufbau-Kantenrolle 50mm
Gummi/Nylon

50mm Light Surface Edge Mount Castor

Rubber *0,183 kg/St* *Black*

A5251

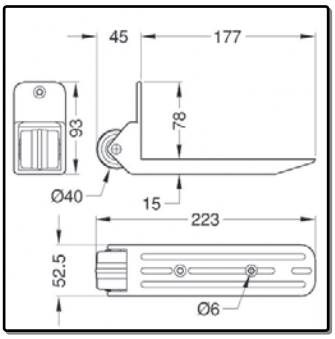

Aufbau-Kantenrolle 40mm
Gummi/Nylon

40mm Light Surface Edge Mount Castor

Rubber *0,166 kg/St* *Black*

W0958

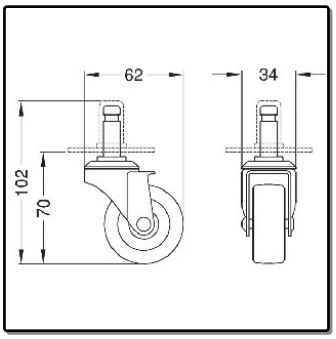

Steckrolle 50mm mit Aufnahme-Hülse

Push in Castor with Metal Socket

Steel/Rubb. *0,230 kg/St* *Black*

D0941/5

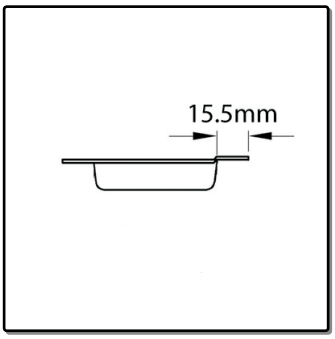

Einbauschale, einseitig gestuft
130x89mm

Castor Dish with Offset
130x89mm

1.5mm Steel *0,125 kg/St* *Zinc*

W0964

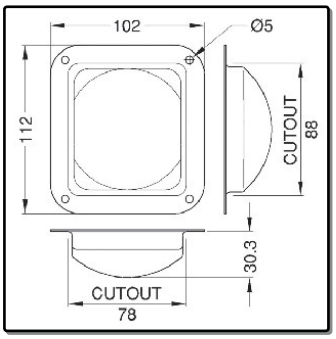

Einbau-Stellmulde für Rollen

Recess Castor dish.
Wheel fits better in Dish, More Security

1.2mm Steel *0,130 kg/St* *Zinc*

W0968z

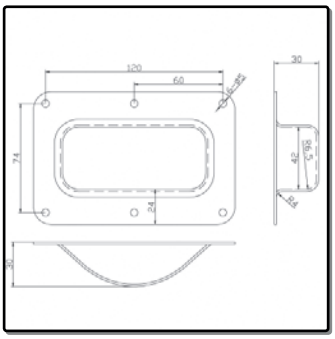

Einbau-Stellmulde für Rollen
Aussenmaß: 136x90mm

Recess Castor dish.
Wheel fits better in Dish, More Security
Dish: 136x90mm

1.5mm Steel *0,120 kg/St* *Zinc*

F1698/LD

ABS-Fuß
Ø12x8mm

ABS Foot
Ø12x8mm

F1694

Gummifuß
Ø18x10mm

Rubber Foot
Ø18x10mm

F1693

Gummifuß mit Stahleinlage
Ø25x10mm

Rubber Foot with Steel Washer
Ø25x10mm

F1692

Gummifuß mit Stahleinlage
Ø25x15mm

Rubber Foot with Steel Washer
Ø25x15mm

F1691

Gummifuß mit Stahleinlage
Ø25x25mm

Rubber Foot with Steel Washer
Ø25x25mm

F1697

Gummifuß mit Stahleinlage
Ø25x32mm

Rubber Foot with Steel Washer
Ø25x32mm

F1631

ABS-Fuß
Ø28x12mm

ABS Foot
Ø28x12mm

F1633

Gummifuß mit Stahleinlage
Ø28x12mm

Rubber Foot with Steel Washer
Ø28x12mm

9620

Gummifuß
Ø35 x33mm

Rubber Foot
Ø35 x33mm

F1687

Gummifuß mit Stahleinlage
Ø38x10mm

Rubber Foot with Steel Washer
Ø38x10mm

F1686

Gummifuß mit Stahleinlage
Ø40x15mm

Rubber Foot with Steel Washer
Ø40x15mm

F1555

ABS-Fuß
Ø38x14mm

ABS Foot
Ø38x14mm

F1556

ABS-Fuß
Ø38x16mm

ABS Foot
Ø38x16mm

F1686/20

Gummifuß mit Stahleinlage
Ø40x20mm

Rubber Foot with Steel Washer
Ø40x20mm

F1686/25

Gummifuß mit Stahleinlage
Ø40x25mm

Rubber Foot with Steel Washer
Ø40x25mm

F1615

Gummifuß mit Stahleinlage
Ø43x19mm

Rubber Foot with Steel Washer
Ø43x19mm

Gleitknöpfe - Glides

F0615z

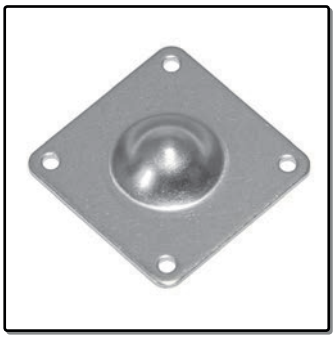

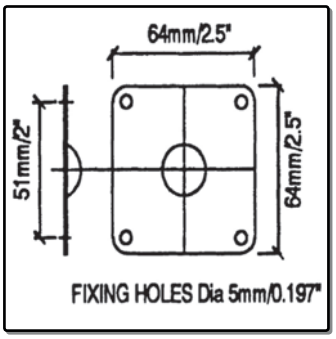

Stahlgleitknopf groß
Höhe 13.5mm
F0615z + F0620z: Höhe 20mm
Stacking Foot, Mates with F0620z
Height 13.5mm
F0616z + F0621z: Height 20mm

2.5mm Steel *0,069 kg/St* *Zinc*

F0620z

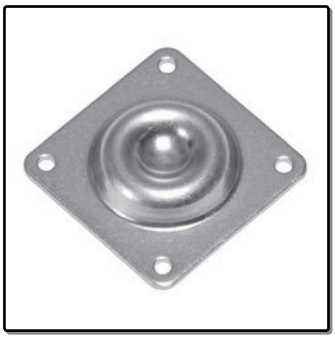

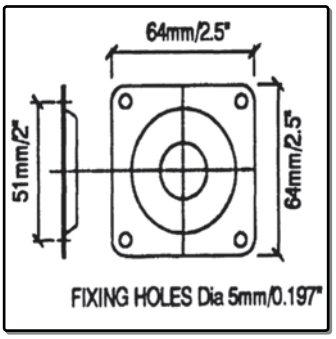

Muldenplatte zu F0615z
Höhe 11.5mm
F0615z + F0620z: Höhe 20mm
Stacking Foot, Mates with F0615z
Height 11.5mm
F0615z + F0620z: Height 20mm

2.5mm Steel *0,080 kg/St* *Zinc*

F0616z

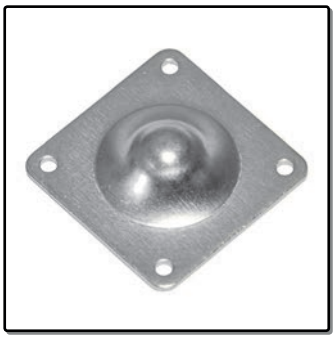

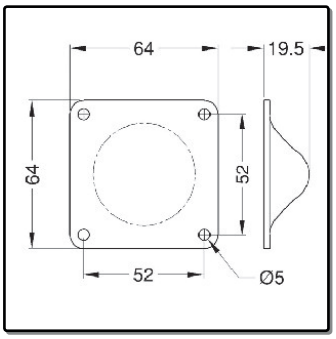

Stahlgleitknopf groß
Höhe 19.5mm
F0616z + F0621z: Höhe 30mm
Stacking Foot, Mates with F0621z
Height 19.5mm
F0616z + F0621z: Height 30mm

2.5mm Steel *0,069 kg/St* *Zinc*

F0621z

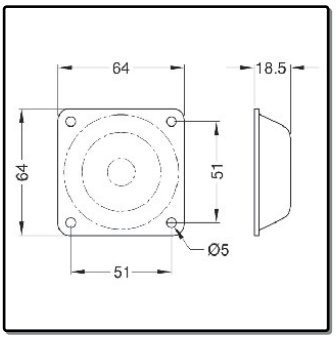

Muldenplatte zu F0616z
Höhe 18.5mm
F0616z + F0621z: Höhe 30mm
Stacking Foot, Mates with F0616z
Height 18.5mm
F0616z + F0621z: Height 30mm

2.5mm Steel *0,080 kg/St* *Zinc*

F0690

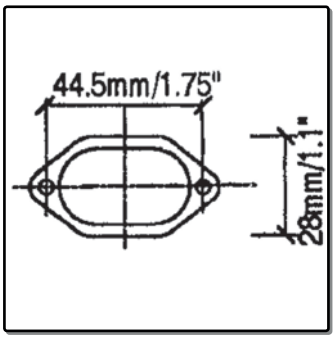

Stahlgleitknopf oval, 2 Bohrungen

Glide Foot, Rectangular, 2 Fixations

1.2mm Steel *0,011 kg/St* *Zinc*

9645

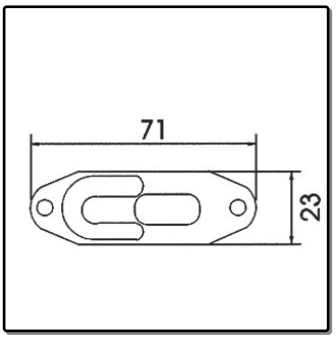

Stahlgleitknopf mit Stapelsystem

Glide and Stacking Foot

1.2mm Steel *0,013 kg/St* *Zinc*

F1642

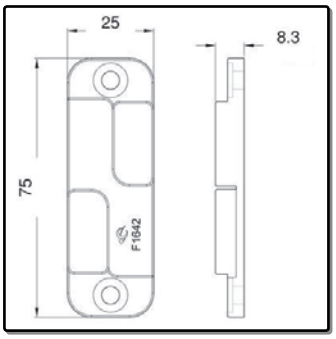

ABS-Gleitknopf mit Stapelsystem

Glide and Stacking Foot

Plastic *0,005 kg/St* *Black*

W8996 - W8998

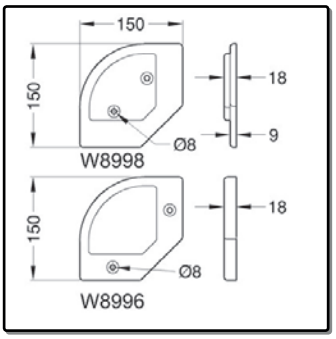

Gleit- u. Stapelsystem für große Gehäuse
W8996 = Female
W8998 = Male
Glide/Stacking System for Large Housings
W8996 = Female
W8998 = Male

ABS *0,080 kg/St* *Black*

F0624

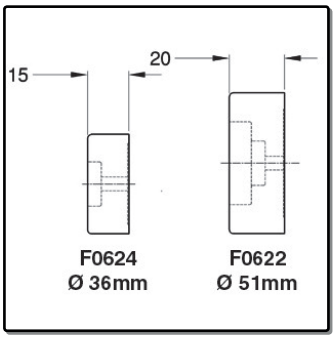

Gleitfuß Ø 36mm (Male)
passend zu F0622
Stapelsytem
Foot + Stacking Foot ø 36mm (Male)
Stacking Foot, mates with F0622

ABS *0,010 kg/St* *Black*

F0622

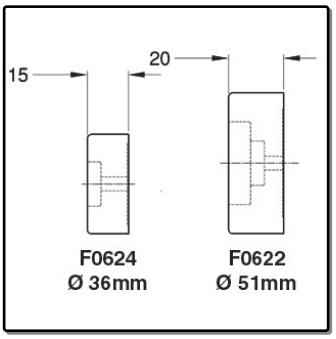

Gleitfuß Ø 51mm (Female)
passend zu F0624
Stapelsystem
Foot + Stacking Foot ø 51mm (Female)
Stacking Foot, mates with F0624

ABS *0,010 kg/St* *Black*

F3852

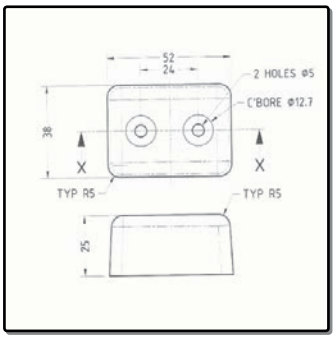

ABS-Gleitfuß 52x38x25mm
passend zu W8075z, W8375z, W8675z

ABS Foot
52x38x25mm

Plastic *0,019 kg/St* *Black*

F1699/LD

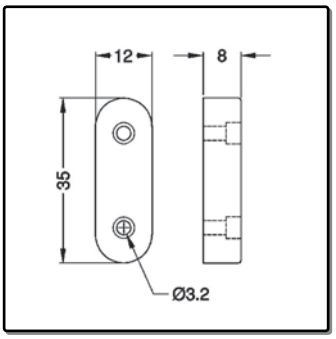

ABS-Gleitfuß
35x12mm

ABS Glide Foot
35x12x8mm

ABS *0,002 kg/St* *Black*

Gleitknöpfe - Glides

F1241

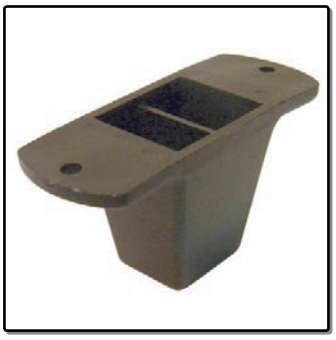

ABS-Fuß 85x33x43mm
passend zu A5251

Plastic Foot
Matches Corner Castor A5251
85x33x43mm

Poluprop. *Black*

F1550 - F1950

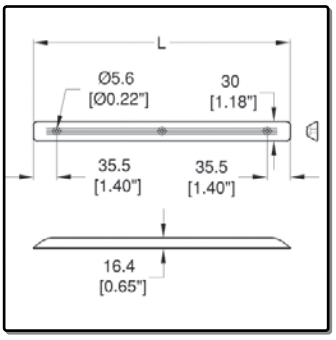

Gleitkufe / Rammschutz
F1550: 394mm
F1950: 494mm
Plastic Skid
F1550: 394mm
F1950: 494mm

ABS *0,044 kg/St* *Black*

D2101z

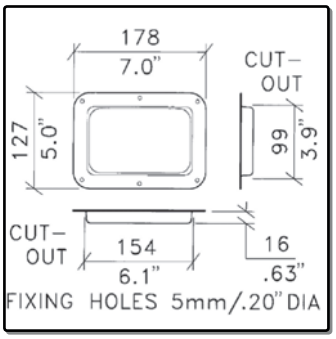

Einbauschale, ungestanzt
passend zu D2101L

Dish
Fits D2101L

1.5mm Steel *0,300 kg/St* *Zinc*

D2101/04

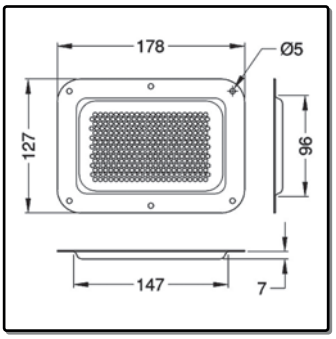

Einbaulüftungsgitter

Vented Dish
More Ventilation!

1.5mm Steel *0,150 kg/St* *Zinc*

D0536/07z

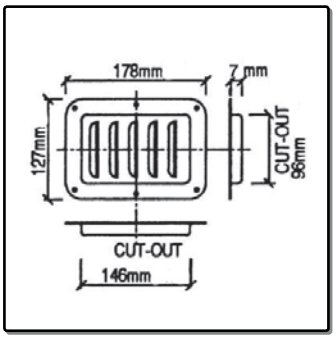

Einbaulüftungsgitter

Vented Dish

1.5mm Steel *0,228 kg/St* *Zinc*

D0506/07z

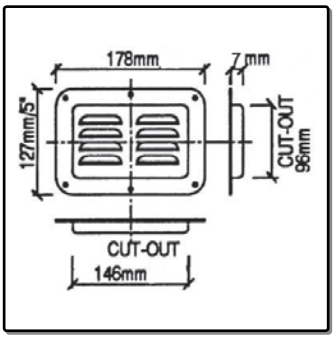

Einbaulüftungsgitter, horizontal

Vented Dish, Horizontal

1.2mm Steel *0,224 kg/St* *Zinc*

D0941z

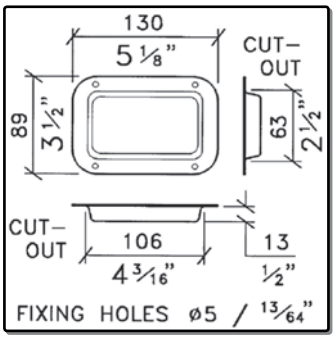

Einbauschale, ungestanz

Dish
Unpunched

1.2mm Steel *0,130 kg/St* *Zinc or Black*

D0941/5

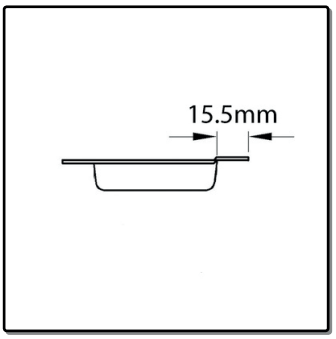

Einbauschale, einseitig gestuft

Castor Dish with Offset

1.5mm Steel *0,125 kg/St* *Zinc*

Einbauschalen - Dishes

D0516/07z

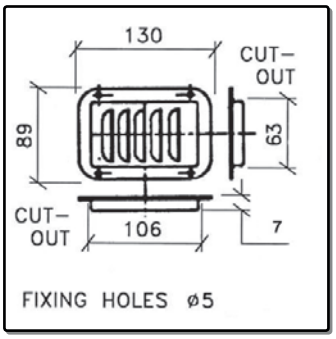

Einbaulüftungsgitter

Vented Dish

1.2mm Steel | 0,128 kg/St | Zinc

D0946z

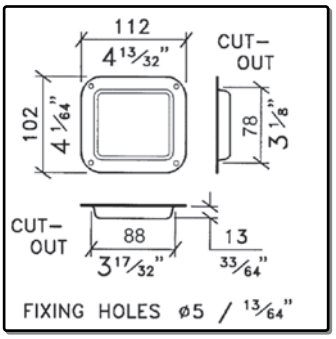

Einbauschale, ungestanzt

Dish
Unpunched

1.2mm Steel | 0,130 kg/St | Zinc or Black

D0511/07z

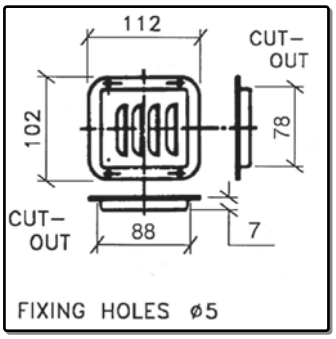

Einbaulüftungsgitter

Vented Dish

1.2mm Steel | 0,110 kg/St | Zinc

G1560z

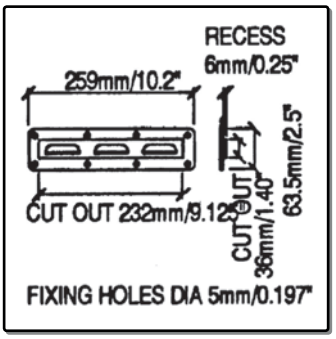

Einbaulüftungsgitter

Vented Dish

1.5mm Steel | 0,128 kg/St | Zinc

W0964

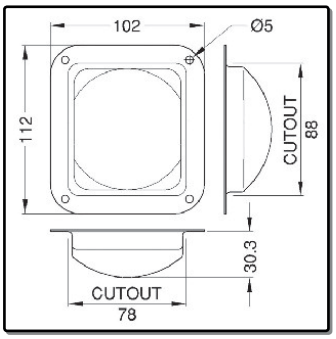

Einbau-Stellmulde für Rollen

Recess Castor dish.
Wheel fits better in Dish, More Security

1.2mm Steel | 0,130 kg/St | Zinc

W0968z

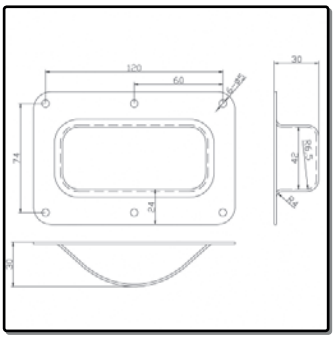

Einbau-Stellmulde für Rollen

Recess Castor dish.
Wheel fits better in Dish, More Security
Dish: 136x90mm

1.5mm Steel | 0,120 kg/St | Zinc

D2501PW

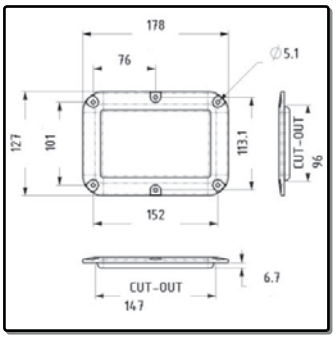

Barcode Scan Fenster, Plexiglas

Bar code scan window
Plexiglass

P.Carbonate *0,115 kg/St* *Clear*

Lack - Paint

9715s

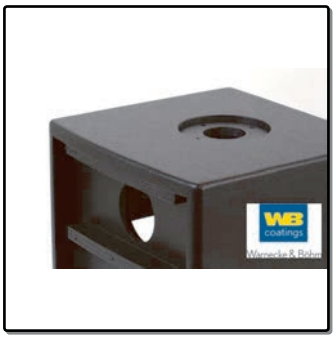

Warnex Strukturlack
schwarz, 6kg-Geb.

Warnex Black Cabinet Paint
6KG, Black

1,000 kg/kg Black

9714s

Warnex Strukturlack
schwarz, 1kg-Geb.

Warnex Cabinet Paint, Black
1KG, Black

1,000 kg/kg Black

9714-7016

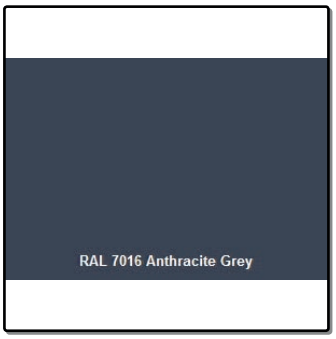

Warnex Strukturlack
RAL 7016 (Grau), 1kg-Geb.

Warnex Black Cabinet Paint
1KG, RAL 7016 (Grey)

1,000 kg/kg Black

9714-9010

Warnex Strukturlack
RAL 9010 (Weiß), 1kg-Geb.

Warnex Black Cabinet Paint
1KG, RAL 9010 (White)

1,000 kg/kg Black

9721

Holzbeize, schwarz, 2.5L

Paint, Matt Black, 2.5Ltr

2,500 kg/St Black

9720

Lackspray, schwarz

Brush Paint, Black

Lackspray 0,450 kg/St Black

M5000 - M5005

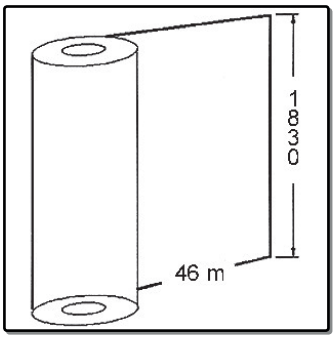

Hart-Vlies
M5000: grau (Rolle 1.83m x 46m)
M5005: schwarz (Rolle 1.83m x 50m)
Carpet Covering
M5000: Grey (Role 183cm x 46m)
M5005: Black (Role 183cm x 50m)

Carpet *0,340 kg/m²* *Grey or Black*

8610s

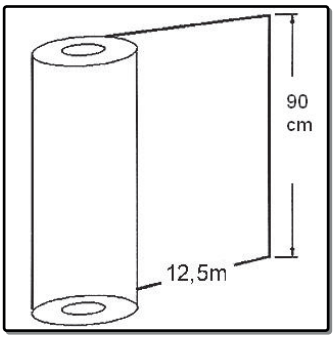

Filz schwarz, selbstklebend
(Rolle 0.90cmx15m)

Black Fleece, Selfadhesive
15mx90cm

Fleece *0,256 kg/m²* *Black*

8715G

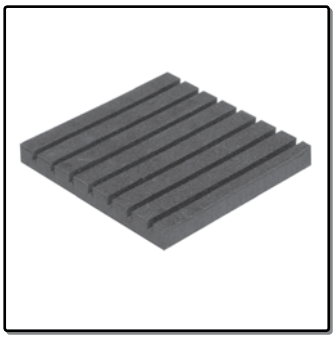

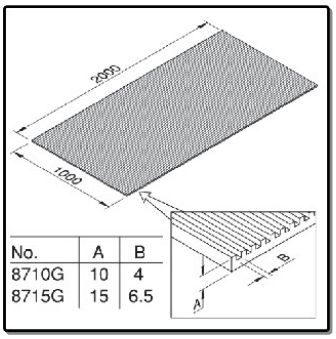

Plastazon 15mm, genutet (6.5mm-Nuten)
zu 6.5mm Multiplex-Holz

15mm Grooved Hard Foam, Groove 6.5mm
Fits 6.5mm Wood

29 kg/m3 *Black*

8710G

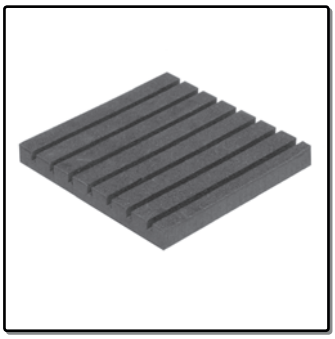

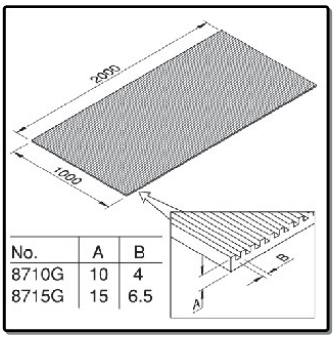

Plastazon 10mm, genutet (4mm-Nuten)
zu Kunstroffplatte x15030s

10mm Grooved Hard Foam, Groove 4mm
Fits 4mm Sheet x15030s

29 kg/m3 *Black*

x15030s

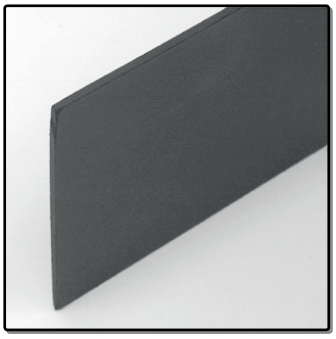

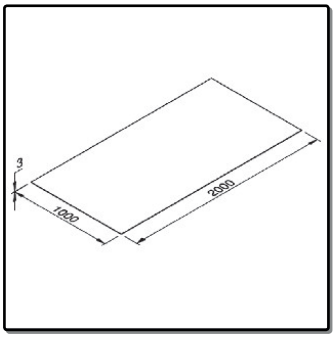

Kunststoffplatten, 3mm, schwarz
passend zu Schaumstoff 8710G

ABS Sheet 100x200cm
Fits 8710G

PP *6,200 kg/m²*

8251

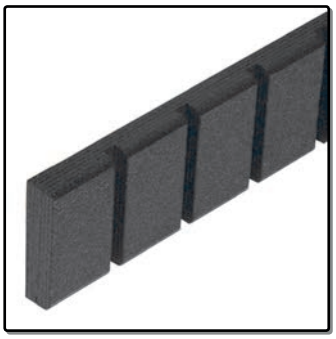

Nutenleiste, Einschub 10mm, lackiert
1207x80x21mm

Dividing Wall for 10mm Wood, Painted
1207x80x21cm

Birch *1,100 kg/St* *Black*

MX91155

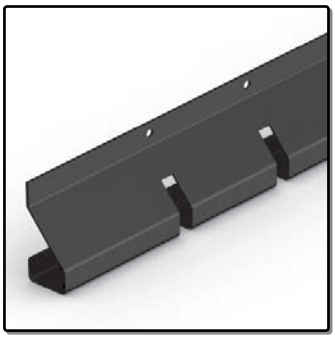

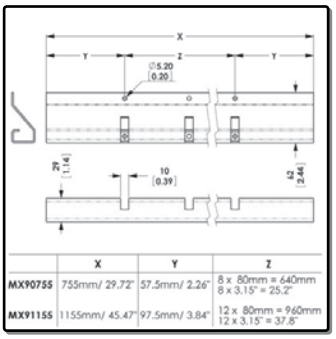

Stahl-Fachtrennleiste, 1160mm

Dividing Strip for 9mm Dividers, 1160mm

Steel *1,866 kg/St* *Black*

E2226

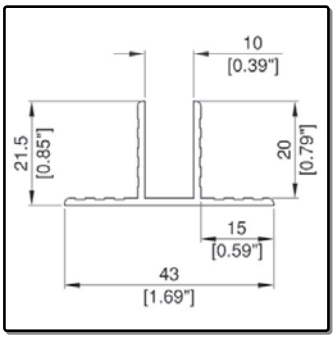

Trennwandeinschubprofil 10mm

Case Divider Extrusion for 10mm

Aluminium *0,322 kg/m* *Aluminium*

0600

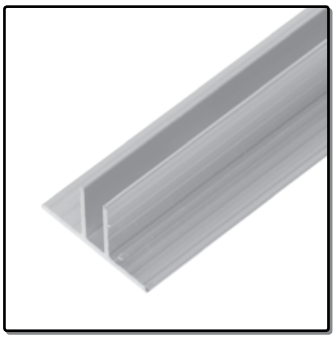

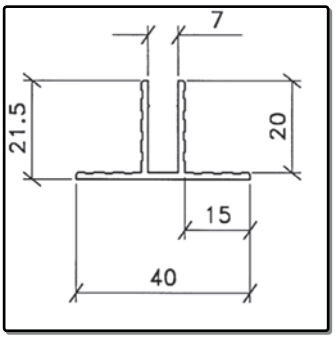

Trennwandeinschubprofil 7mm

Case Divider Extrusion for 7mm

Aluminium *0,310 kg/m* *Aluminium*

0620

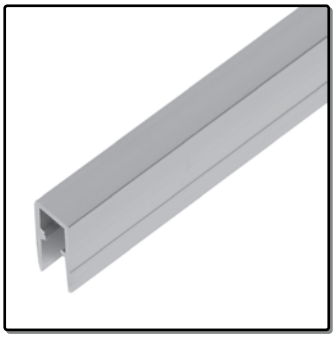

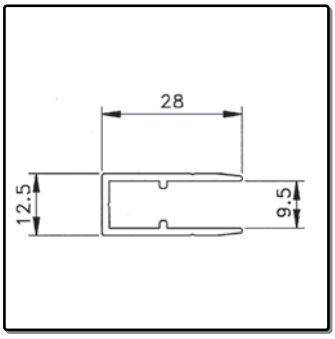

Trennwand- und U-Profil, 9.5mm

Trim U Shape for 9.5mm

Aluminium *0,283 kg/m* *Aluminium*

0611

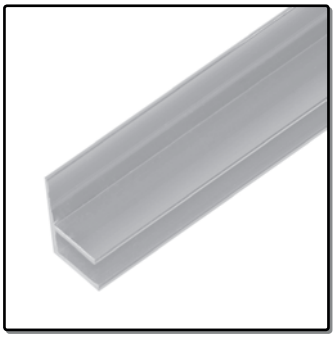

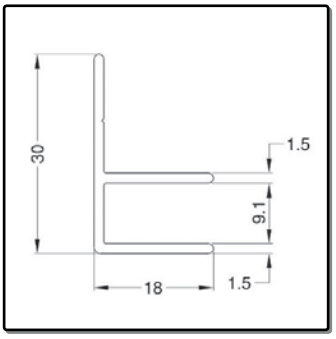

F-Trennwandeinschubprofil 9.1mm

Case Divider Extrusion for 9.1mm

Aluminium *0,260 kg/m* *Aluminium*

E4009

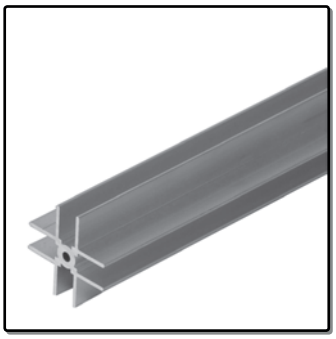

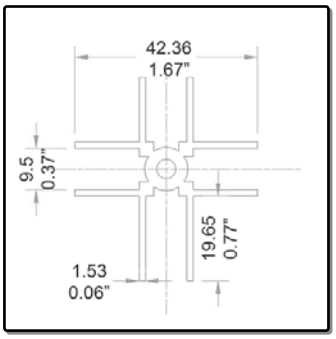

Trennwandprofil 9.5mm

4 Way Divider Extrusion 9.5mm

Aluminium *0,197 kg/m* *Aluminium*

E4007

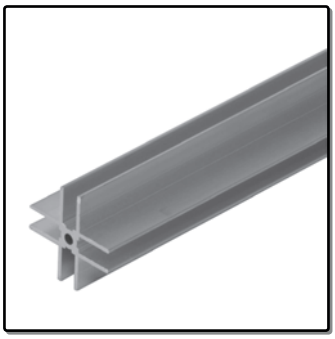

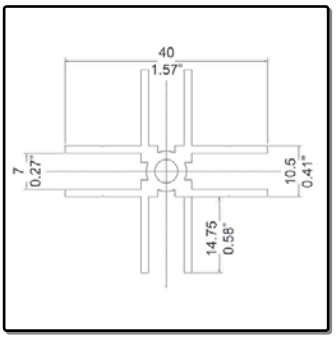

Trennwandprofil 7mm

4 Way Divider Extrusion 7mm

Aluminium *0,197 kg/m* *Aluminium*

B1630z - B1631z

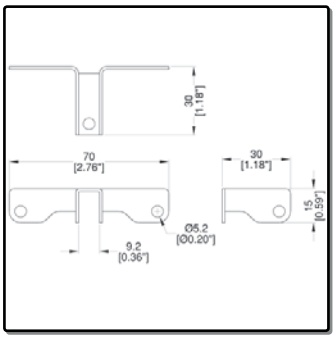

Trennwandbefestigung
B1630z: 6.7mm
B1631z: 9.2mm
Bracket for Dividing Walls
B1630z: 6.7mm
B1631z: 9.2mm

Steel *0,016 kg/St* *Zinc*

B1640z - B1641z

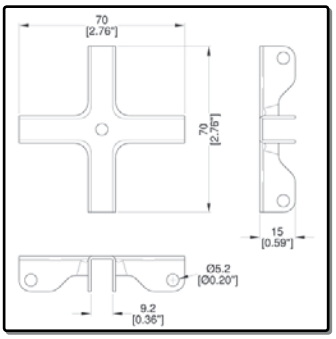

Stabilisierungskreuz
B1640z: 6.7mm
B1641z: 9.2mm
Cross for Dividing Walls
B1640z: 6.7mm
B1641z: 9.2mm

Steel *0,036 kg/St* *Zinc*

B1610z

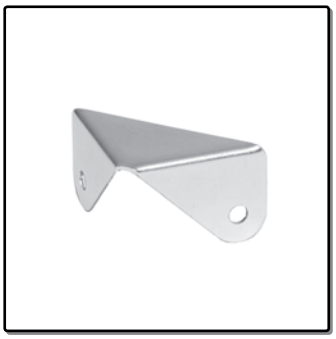

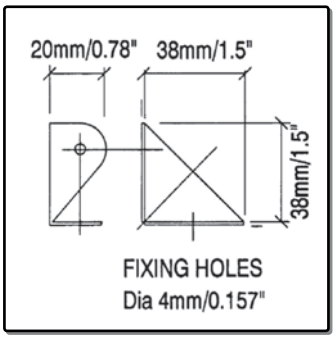

Tragewinkel

Tray Rest

1.5mm Steel *0,012 kg/St* *Zinc*

P1250-10

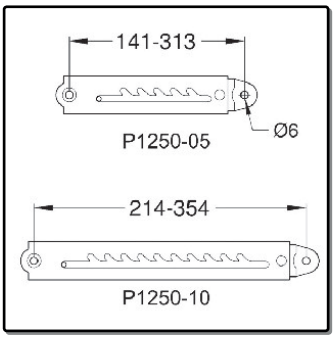

Rasterscharnierpaar
P1250-05: 141-313mm
P1250-10: 214-354mm
Pair of Teleskopic Hinges
P1250-05: 141-313mm
P1250-10: 214-354mm

Steel *0,580 kg/P.* *Messing*

M1815

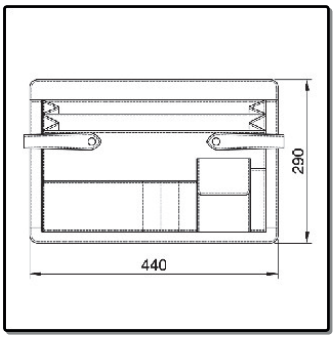

Attaché-Einsatz

Attaché Insert

Vinyl *0,518 kg/St* *Black*

8450

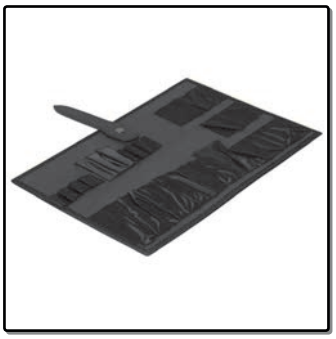

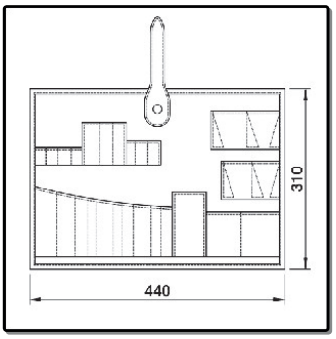

Werkzeugkoffer-Einsatz, klappbar

Tool Insert

Vinyl/PVC *0,300 kg/St* *Black*

8651

Netztasche, klettbar
152x143mm

Net Pocket - Velcro on back
152x143mm

Nylon *0,080 kg/St* *Black*

8652

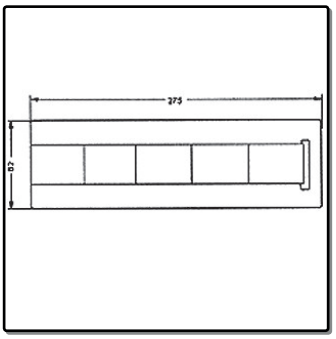

Schlaufenhalter 5-fach, klettbar
275x87mm

Gadget Holder - Velcro on back
275x87mm

Nylon *0,080 kg/St* *Black*

6712

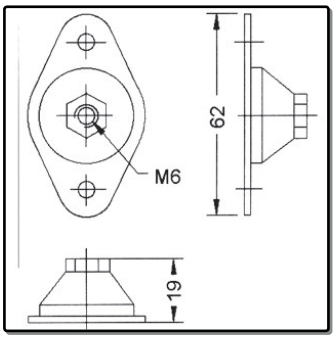

Schwingmetall M6, 60x20

Shock Mount Fastener M6

Rubber/St. *0,021 kg/St* *Black*

6715

Schwingmetall M8, 30x30

Shock Mount Fastener M8

Rubber/St. *0,050 kg/St* *Black*

R2410z - R2418z

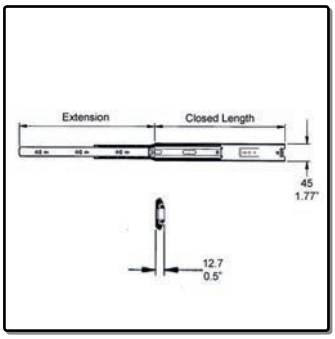

Teleskop-Vollauszüge für 45kg Belastung
25cm, 30cm, 35cm, 40cm und 45cm Länge
aushängbar und mit Schließstop
Drawer Slide, Load Rating 45kg/P.
Length: 25cm, 30cm, 35cm, 40cm and 45cm
Trigger Release Disconnect

Steel *1.200 kg/P.* *Zinc*

R2420z - R2428z

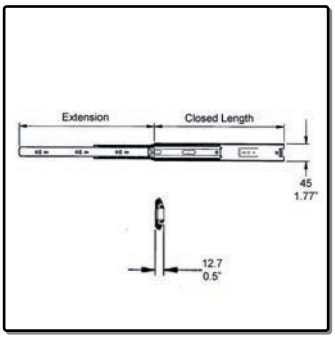

Teleskop-Vollauszüge für 45kg Belastung
50cm, 55cm, 60cm, 65cm und 70cm Länge
aushängbar und mit Schließstop
Drawer Slide, Load Rating 45kg/P.
Length: 50cm, 55cm, 60cm, 65cm and 70cm
Trigger Release Disconnect

Steel *1.200 kg/P.* *Zinc*

6420 - 6422

Teleskop-Vollauszüge für 100kg Belastung
40cm, 50cm und 60cm Länge

Drawer Slide, Load Rating 100kg/P.
Length: 40cm, 50cm and 60cm

Steel *5,000 kg/P.* *Zinc*

6435s - 6460s

Teleskop-Vollauszüge für 45kg Belastung
35cm, 40cm, 45cm, 50cm und 60cm Länge
aushängbar und mit Schließstop
Drawer Slide, Load Rating 45kg/P.
Length: 35cm, 40cm, 45cm, 50cm and 60cm
Trigger Release Disconnect

Steel *1.200 kg/P.* *Black*

6435As - 6450As

Aufsteckwinkel für Teleskopauszüge
35cm, 40cm, 45cm und 50cm Länge
passend zu 6435s - 6460s
L-Angle for Drawer Slide
35cm, 40cm, 45cm and 50cm Length
Fits to 6435s - 6460s

Steel *0,200 kg/P.* *Black*

2190

Tischverbinder gefedert
Gegenstück zu 2195

Table Mounting Stud, Springloaded
connect lid to the chassis of case
use chassis 2190

Aluminium *0,076 kg/St* *Aluminium*

2195

Chassis für den Tischverbinder
Gegenstück zu 2190

Chassis to fit Table Mounting Stud
mounted in case and fits part 2190

Aluminium *0,024kg/St* *Aluminium*

R1600

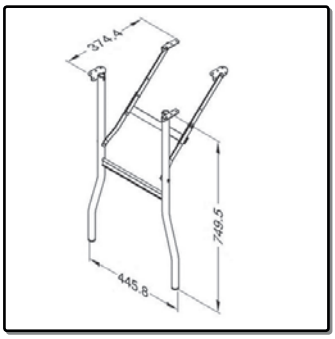

Tischbein, klappbar

Table Leg

Steel *2,800 kg/St* *Black*

G1570

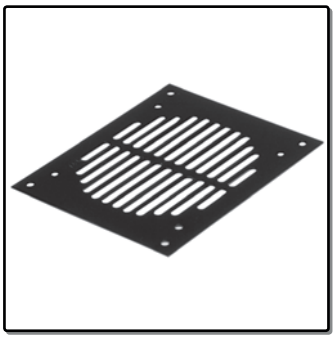

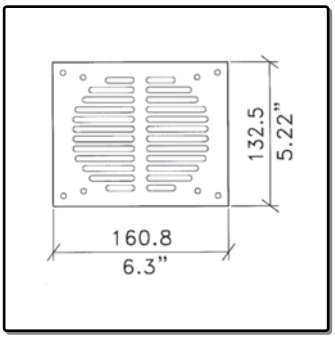

Aufbaugitter für 1 Axial-Lüfter 6339

Single Fan Grille, Fits Fan 6339

Steel *0,140 kg/St* *Black*

R1329-SL

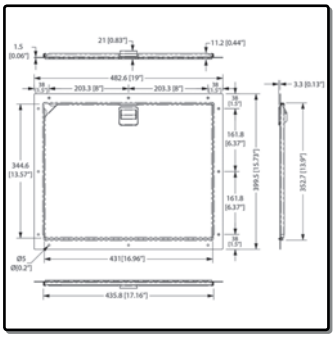

Serviceklappe
50x42cm

Rack Door
50x42cm

1.5mm Steel *3.300 kg/St* *Black*

R1325

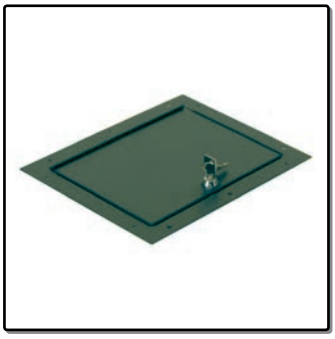

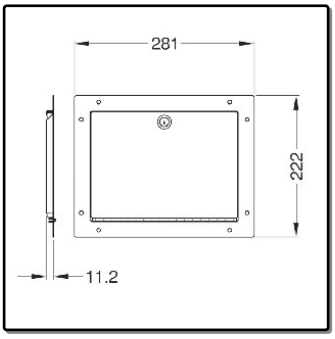

Service-Klappe, abschließbar

Rack Door with Lock, 222x281mm

1.2mm Steel *1,000 kg/St* *Black*

9567

Tragegurt
25mmx130cm

Shoulderstrap
25mmx130cm

Nylon *0,073 kg/St* *Black*

SO-3124c

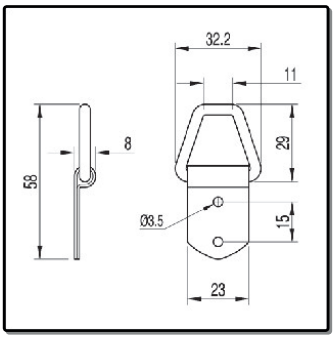

Gurteinhängelasche, verchromt

Chromed Strap Fitting

Steel *0,020 kg/St* *Chrome*

9539n - 9543c

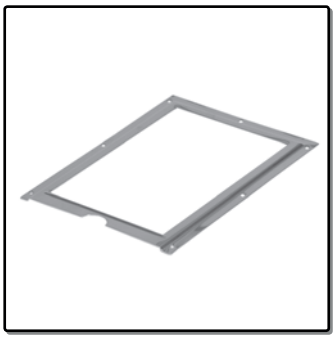

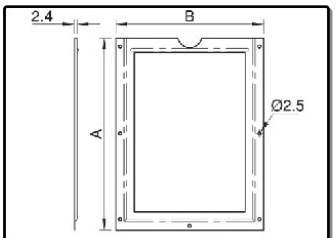

No.	A	B
9540	161	124
9541	120	92
9543	88	69

Adressträger-Rahmen für DIN-Formate
DIN A5, DIN A6, DIN A7 und DIN A8

Nameholder (DIN Form Papers)
DIN A5, DIN A6, DIN A7 and DIN A8

1.0mm Steel *0.030 kg* *Chrome*

9810/1 - 9810/2

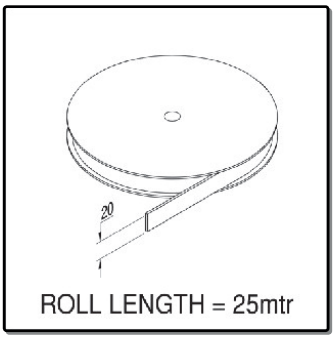

Klett-Haft und Flauschband 20mm
9810/1: Velcro Klett-Haftband
9810/2: Velcro Klett-Flauschband
Velcro Adhesive 20mm
9810/1: Velcro male
9810/2: Velcro Fleece

0,014 kg/m *Black*

CPU-87B - CPU87S

CPU Holder
CPU-87B: schwarz
CPU-87S: silber
CPU Holder
CPU-87B: Black
CPU-87S: Silver

3,000 kg/St *Black or Silver*

TV-Lifter / TV Lift

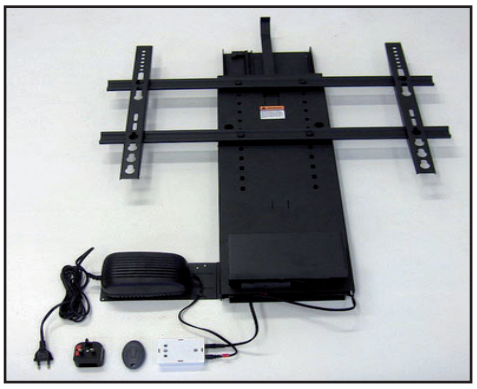

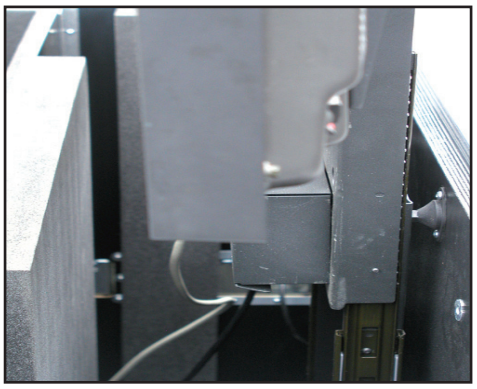

TV-Lifter für Flightcases und Möbel

(mit Fernbedienung)

TS-750
Ausfahrhöhe: 750mm
Einbaumaße (H/B/T): 865x250x63mm
Tragfähigkeit: 100kg

TS-700
Ausfahrhöhe: 700mm
Einbaumaße (H/B/T): 600x286x72mm
Tragfähigkeit: 100kg

TS-1000
Ausfahrhöhe: 1000mm
Einbaumaße (H/B/T): 750x286x72mm
Tragfähigkeit: 100kg

build in tv lifts for flightcases and furniture

(+ remotecontrol)

TS-750
Stroke: 750mm
Dimension: 865x250x63mm
Max. Load: 100kg

TS-700
Stroke: 700mm
Dimension: 600x286x72mm
Max. Load: 100kg

TS-1000
Stroke: 1000mm
Dimension: 750x286x72mm
Max. Load: 100kg

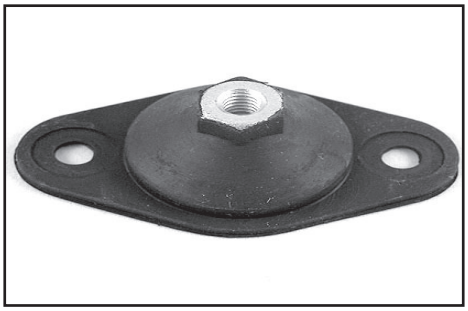

6712
Gummi-Schwingmetall M6.
Empfohlene Befestigung bei Einbau der Lifter in Flightcases.

6712
Penn Elcom advise to use anti shock rubber 6712 to avoid damage during transport of the flightcase

Befestigungsmittel / Rivets - Screws

Blindniete gerillt / Grooved Rivet

91408GE: 4x8mm
91412GE: 4x12mm

91508GE: 4.8x8mm
91510GE: 4.8x10mm

91512GE: 4.8x12mm
91514GE: 4.8x14mm
91516GE: 4.8x16mm
91520GE: 4.8x20mm
91525GE: 4.8x25mm

POP Blindniete gerillt (Tucker) / POP Grooved Rivet (Tucker)

91408G: 4x8mm
91412G: 4x12mm

91507G: 4.8x7.4mm
91511G: 4.8x10.9mm

91512G: 4.8x12.8mm
91514G: 4.8x14.5mm
91514Gk: 4.8x14.5mm (*schwarz/*black)
91525G: 4.8x25mm

Blindniete glatt / Plain Rivet

91416: 4x16mm
91420: 4x20mm

91506: 4.8x6mm
91508: 4.8x8mm
91516: 4.8x16mm
91520: 4.8x20mm

Unterlegscheibe / Plain Washer

95u4G: 4mm
95u5G: 5mm
95u6G: 6mm

Sperrzahnschraube / Screw with fixed Ring

9406: M6x20mm
9405: M6x30mm

9515: M8x16mm
9516: M8x20mm
9518: M8x25mm
9517: M8x30mm

Einschlagmutter / Tee Nut

9505: M5

9506-09: M6x9mm
9506: M6x12mm

9508-09: M8x9mm
9508: M8x12mm

HSS-Spiralbohrer / HSS-Wood Drill

9442: 4.2mm
9552: 5.2mm

Kistenbeschläge - Crating

FE-6125

Paletten-Füße, 153x70mm, blau
zur Stoß-und-Vibrationsdämpfung
Tragfähigkeit 31.8-56.7kg
Pallet Cushion, 153x70mm, Blue
Load Capacity 31.8-56.7kg

Polyethylen *0,150kg/St* *Blue*

FE-6225

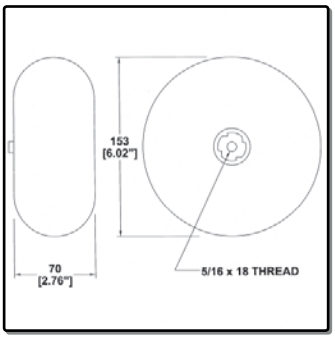

Paletten-Füße, orange
zur Stoß-und-Vibrationsdämpfung
Tragfähigkeit 56.7-102kg
Pallet Cushion Orange
Load Capacity 56.7-102kg

Polyethylen *0,150kg/St* *Orange*

FE-6228

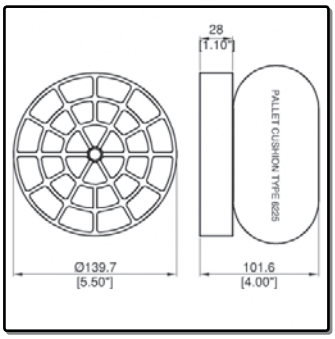

Abstandhalter (Spacer) für Paletten-Füße

Pallet Cushion Spacer
Increases Cushion height to 100mm

Plastic *0,082kg/St* *Black*

CE-1054

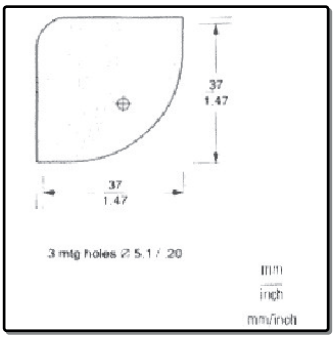

Flach-Ecke klein, halbrunde Schenkel

Small Flat Corner

Steel *0,021 kg/St* *Zinc*

P1390GLV

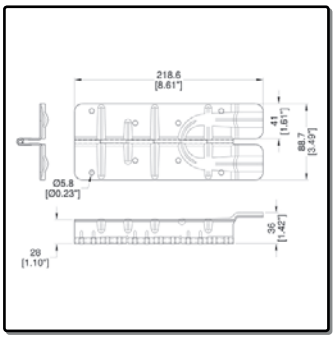

Scharnier für Paletten-Aufsetzrahmen
Stift herausnehmbar
218x88mm
Pallet Collar Assembly, removable Pin
218x88mm

Steel *Galvanized*

LE-1652

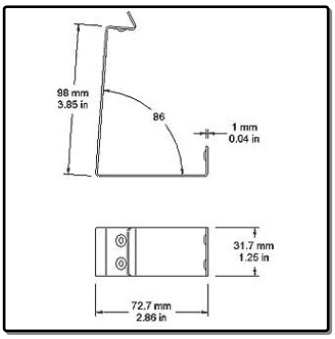

Spannklammer für schraubenlose Kisten-
montage
98x32x73mm
Springlock
98x32x73mm

1.5mm Steel *Zinc*

HE-2457

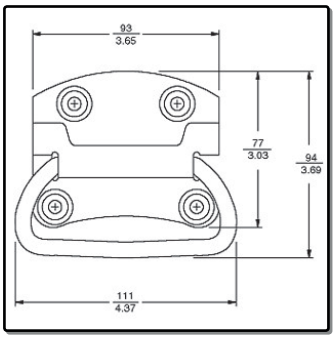

Aufsatzgriff, ungefedert

Surface Handle
No Spring

Steel *0,150 kg/St* *Zinc*

H1080

Aufsatzklappgriff aus Aluminium

Surface Handle with Spring
Aluminium

Aluminium *0,088 kg/St* *Raw*

PE-1903 - 1904

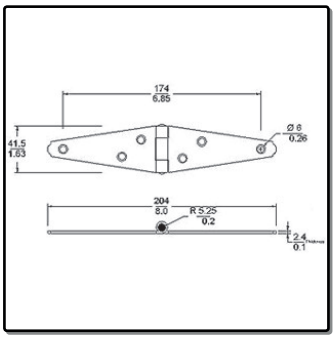

Kistenscharnier
PE-1903: 32x75mm
PE-1904: 32x100mm
Strap Hinges
PE-1903: 32x75mm
PE-1904: 32x100mm

Steel *0,120kg/St.* *Zinc*

PE-1906 - 1908

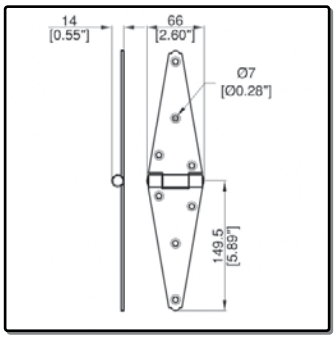

Kistenscharnier
PE-1906: 66x150mm
PE-1908: 74x203mm
Strap Hinges
PE-1906: 66x150mm
PE-1908: 74x203mm

Steel *0,420kg/St.* *Zinc*

LE-2698

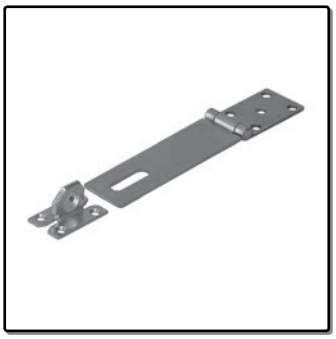

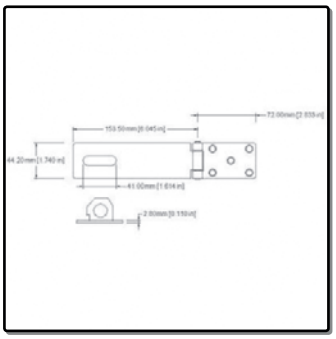

Sicherheits-Überfalle
154x45mm

Heavy Duty Padlock Hasp
154x54mm

1.5mm Steel *0,280 kg/St* *Zinc*

BE-5388g

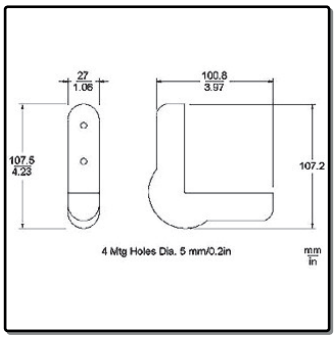

Winkel-Stoßschutz, Gummi, eckverstärkt

HD Corner Bumper with Steel Instert

Rubber/Stl. *0,180 kg/St* *Grey*

Kistenbeschläge - Crating

L090555/CP

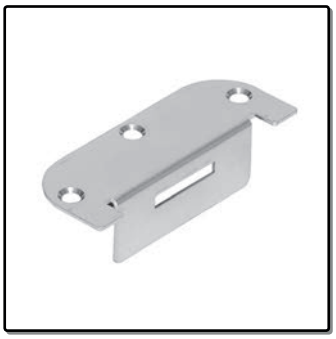

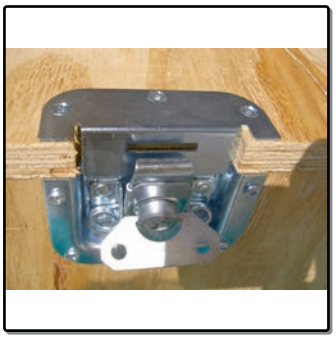

Schließhaken, 90°
passend zu Unterteil L905/915z

Catch Plate for 18mm Wooden Crates
Use with Lockpart L905/915z

1.5mm Steel *0,054 kg/St* *Zinc*

LE-1099/1

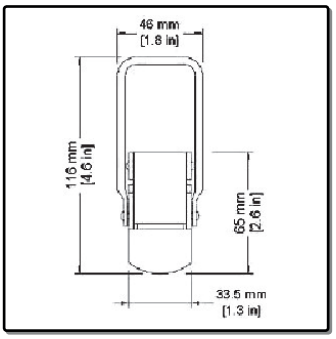

Überfalle
ohne Schließhaken

Drawlatch Heavy Duty
no Striker Plate

Steel *0,138 kg/St* *Zinc*

LE-8338/1

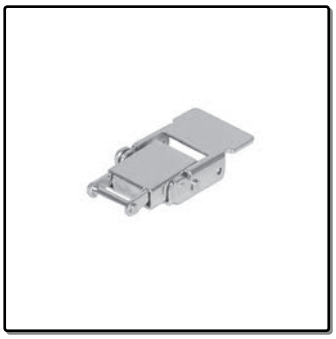

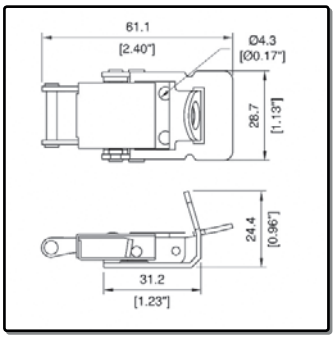

Schloß, mit Öse
ohne Schließhaken

Drawlatch
no Striker Plate

Steel *0,065 kg/St* *Zinc*

xi662

Einweg-Palette 1250x2000mm

Pallet 1250x2000mm

Wood

xi660

Einweg-Palette 800x1200mm

Pallet 800x1200mm

Wood

xi661

Einweg-Palette 600x800mm

Pallet 600x800mm

Wood

9829

Gewicht \ cbm	0,001 - 0,030 cbm	0,031 - 0,135 cbm	0,136 - 0,4000 cbm	0,401 - 1,350 cbm	1,351 + cbm
0 - 5 kg	GRÜN	GRÜN	ORANGE	ORANGE	ROT
6 - 12 kg	GRÜN	ORANGE	ORANGE	ROT	ROT
13 - 23 kg	ORANGE	ORANGE	ROT	ROT	BLAU
24 - 45 kg	ORANGE	ROT	ROT	BLAU	BLAU
46 - 112 kg	ROT	ROT	BLAU	BLAU	GELB
113 - 450 kg	ROT	BLAU	BLAU	GELB	GELB
451 - 650 kg	BLAU	BLAU	GELB	GELB	GRAU
> 651 kg	GELB	GELB	GRAU	GRAU	GRAU

Shockwatch-Label orange
Stoß-Indikator für empfindliche Produkte

Shockwatch Label, Orange
Impact Sensor

0,001 kg/St

9830

Gewicht \ cbm	0,001 - 0,030 cbm	0,031 - 0,135 cbm	0,136 - 0,4000 cbm	0,401 - 1,350 cbm	1,351 + cbm
0 - 5 kg	GRÜN	GRÜN	ORANGE	ORANGE	ROT
6 - 12 kg	GRÜN	ORANGE	ORANGE	ROT	ROT
13 - 23 kg	ORANGE	ORANGE	ROT	ROT	BLAU
24 - 45 kg	ORANGE	ROT	ROT	BLAU	BLAU
46 - 112 kg	ROT	ROT	BLAU	BLAU	GELB
113 - 450 kg	ROT	BLAU	BLAU	GELB	GELB
451 - 650 kg	BLAU	BLAU	GELB	GELB	GRAU
> 651 kg	GELB	GELB	GRAU	GRAU	GRAU

Shockwatch-Label rot
Stoß-Indikator für empfindliche Produkte

Shockwatch Label, Red
Impact Sensor

0,001 kg/St

9831

Gewicht \ cbm	0,001 - 0,030 cbm	0,031 - 0,135 cbm	0,136 - 0,4000 cbm	0,401 - 1,350 cbm	1,351 + cbm
0 - 5 kg	GRÜN	GRÜN	ORANGE	ORANGE	ROT
6 - 12 kg	GRÜN	ORANGE	ORANGE	ROT	ROT
13 - 23 kg	ORANGE	ORANGE	ROT	ROT	BLAU
24 - 45 kg	ORANGE	ROT	ROT	BLAU	BLAU
46 - 112 kg	ROT	ROT	BLAU	BLAU	GELB
113 - 450 kg	ROT	BLAU	BLAU	GELB	GELB
451 - 650 kg	BLAU	BLAU	GELB	GELB	GRAU
> 651 kg	GELB	GELB	GRAU	GRAU	GRAU

Shockwatch-Label lila
Stoß-Indikator für empfindliche Produkte

Shockwatch Label, Lila
Impact Sensor

0,001 kg/St

9832

Gewicht \ cbm	0,001 - 0,030 cbm	0,031 - 0,135 cbm	0,136 - 0,4000 cbm	0,401 - 1,350 cbm	1,351 + cbm
0 - 5 kg	GRÜN	GRÜN	ORANGE	ORANGE	ROT
6 - 12 kg	GRÜN	ORANGE	ORANGE	ROT	ROT
13 - 23 kg	ORANGE	ORANGE	ROT	ROT	BLAU
24 - 45 kg	ORANGE	ROT	ROT	BLAU	BLAU
46 - 112 kg	ROT	ROT	BLAU	BLAU	GELB
113 - 450 kg	ROT	BLAU	BLAU	GELB	GELB
451 - 650 kg	BLAU	BLAU	GELB	GELB	GRAU
> 651 kg	GELB	GELB	GRAU	GRAU	GRAU

Shockwatch-Label gelb
Stoß-Indikator für empfindliche Produkte

Shockwatch Label, Yellow
Impact Sensor

0,001 kg/St

9845

Tiltwatch
Kippindikator für empfindliche Produkte

Tiltwatch Sticker

0,001 kg/St

9846

Tiltwatch-Hinweisaufkleber

Tiltwatch Companion Label

0,001 kg/St

C1568

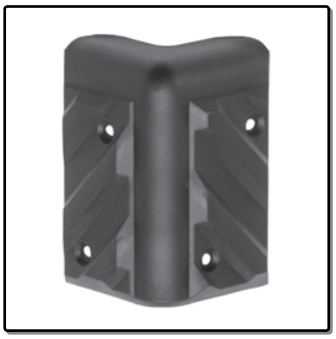

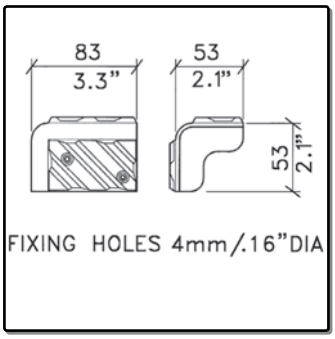

Boxenecke
mit Stapelsystem
Large Chevron
Cabinet Corner, Stackable
Large Chevron

ABS | 0,024 kg/St | Black

C1567

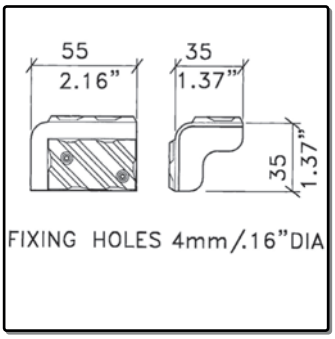

Boxenecke
mit Stapelsystem
Small Chevron
Cabinet Corner, Stackable
Small Chevron

ABS | 0,021 kg/St | Black

C1536

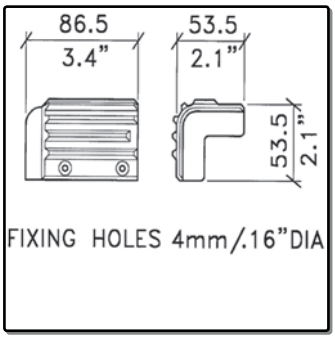

Boxenecke
mit Stapelsystem

Cabinet Corner, Stackable

ABS | 0,030 kg/St | Black

C1537

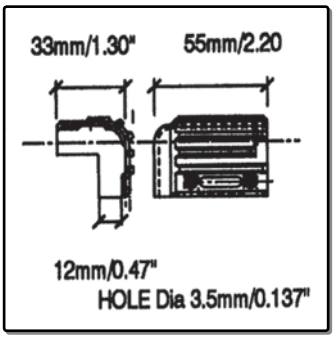

Boxenecke
mit Stapelsystem

Cabinet Corner, Stackable

ABS | 0,020 kg/St | Black

C1335k

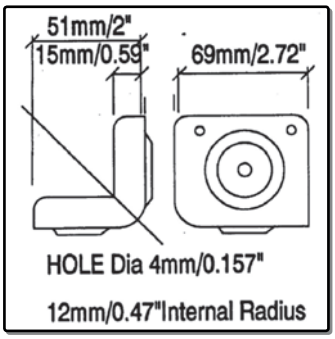

Boxenecke
mit Stapelsystem

Cabinet Corner, 2 Leg
Stackable

1.2mm Steel | 0,070 kg/St | Black

C1214

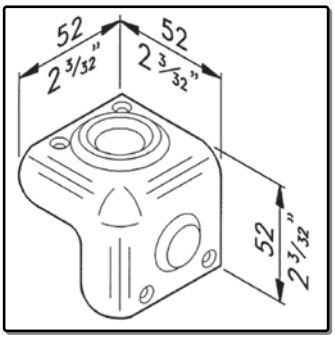

Boxenecke
mit Stapelsystem

Cabinet Corner, 2 Leg
Stackable

ABS | 0,020 kg/St | Black

C1821k

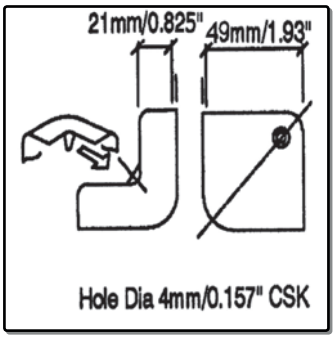

Boxenecke, 2-schenkelig
1 Schenkel abgekantet nach 21mm

Cabinet Corner, Wrap-around

1.2mm Steel *0,050 kg/St* *Black*

C1817k

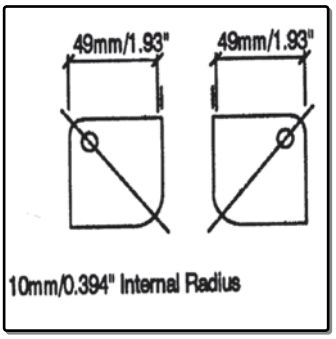

Boxenecke, vertiefte Befestigungslöcher

Cabinet Corner, Countersunk Holes

1.2mm Steel *0,050 kg/St* *Black*

C1824k - C1824n

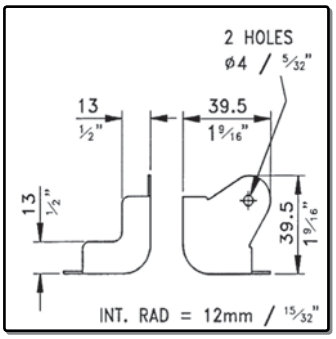

Boxenecke, 2-schenkelig

Cabinet Corner, 2 Legs

0.9mm Steel *0,017 kg/St* *Black or Nickel*

C1823k

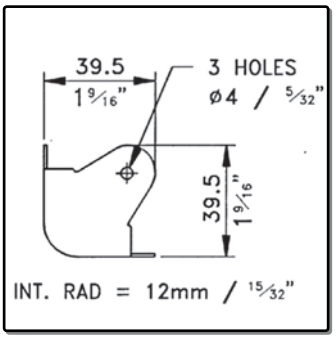

Boxenecke

Cabinet Corner

0.9mm Steel *0,020 kg/St* *Black*

C1819k - C1819n

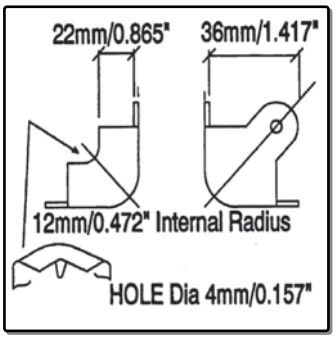

Boxenecke, 2-schenkelig
1 Schenkel abgekantet nach 22mm

Cabinet Corner, Wrap-around

0.9mm Steel *0,019 kg/St* *Black or Nickel*

Boxen-Zubehör - Speaker Cabinet Fittings

H1008

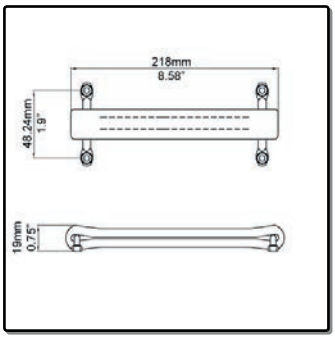

Ledergriff schwarz
mit vernickelten Nietböckchen

Black Leather Handle
Nickel Fittings

Leather *0,086 kg/St* *Black*

H1008t

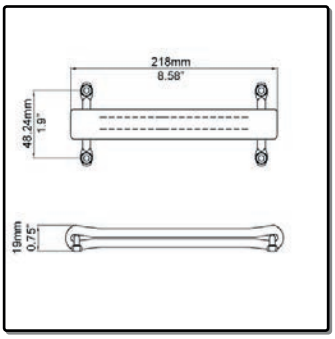

Ledergriff hellbraun
mit vernickelten Nietböckchen

Light Brown (TAN) Leather Handle
Nickle Fittings

Leather *0,086 kg/St* *Light Brown*

H1008br

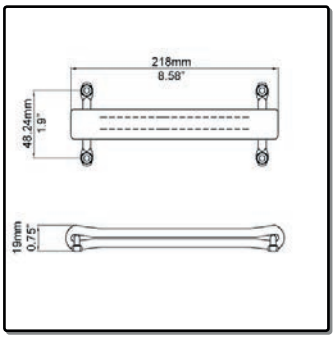

Ledergriff dunkelbraun
mit vernickelten Nietböckchen

Dark Brown Leather Handle
Nickle Fittings

Leather *0,086 kg/St* *Dark Brown*

H1027/DB

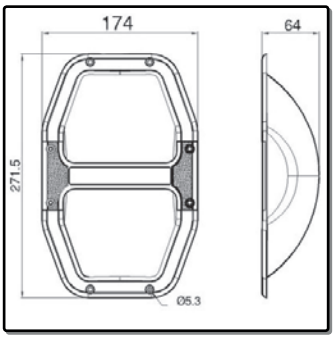

Schalengriff, D&B style
Griffleiste: Aluminium Druckguß

Recessd Bar Handle, D&B Style
Handle: Aluminium Diecast

ABS/Dc.AL *0,279 kg/St* *Black*

H1027

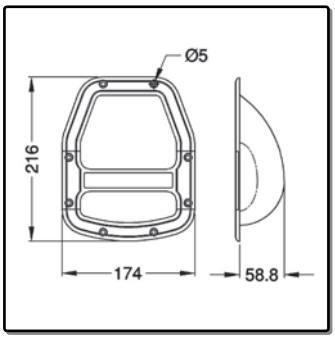

Schalengriff
Griffleiste: Aluminium Druckguß

Recessd Bar Handle
Handle: Aluminium Diecast

ABS/Dc.AL *0,378 kg/St* *Black*

H1070

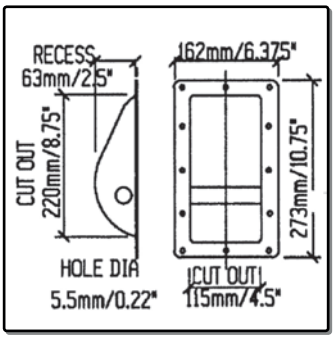

Schalengriff

Recessed Bar Handle

0.9mm Steel *0,540 kg/St* *Black*

H1105

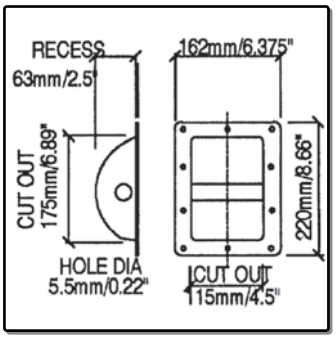

Schalengriff

Recessed Bar Handle

0.9mm Steel *0,540 kg/St* *Black*

H1107

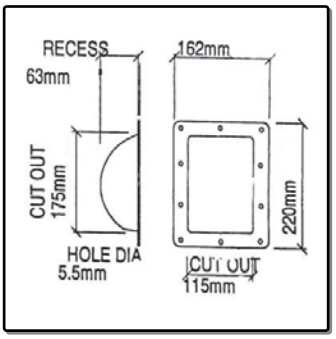

Haube zur rückseitigen Montage an H1105

Recessed Air Seal Cover for Cabinets
with routed wooden handle

Steel *0,540 kg/St* *Black*

H1105G

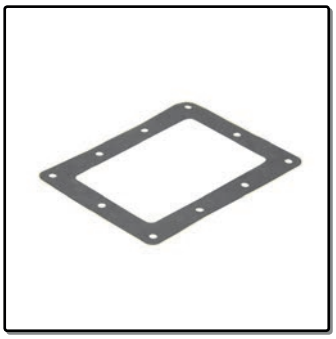

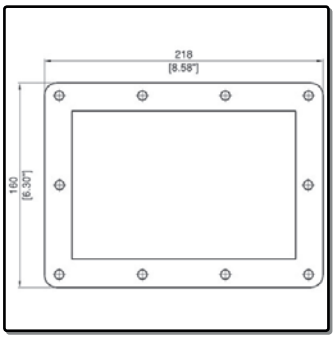

Selbstklebende Dichtung zu H1105

Self Adhesive Gasket to suit H1105ff

Rubber *0,010 kg/St* *Black*

H8805-06

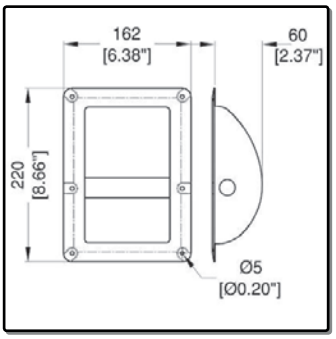

Schalengriff klein, 6 Bohrungen
vertiefte Befestigungslöcher

Small Recessed Bar Handle

0.9mm Steel *0,460 kg/St* *Black*

H1024

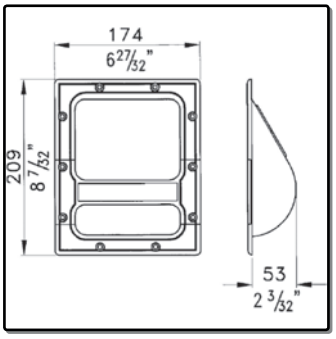

Schalengriff
Griffleiste: Aluminium Druckguß

Recessed Bar Handle
Handle: Aluminium Diecast

ABS/Dc.AL *0,378 kg/St* *Black*

H1015

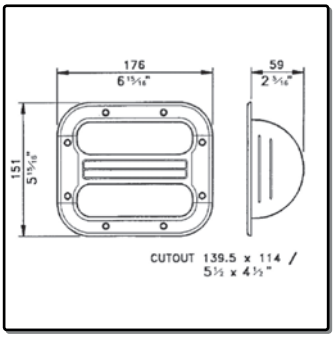

Schalengriff
Griffleiste: ABS

Recessed Bar Handle

ABS *0,154 kg/St* *Black*

Boxen-Zubehör - Speaker Cabinet Fittings

H1017

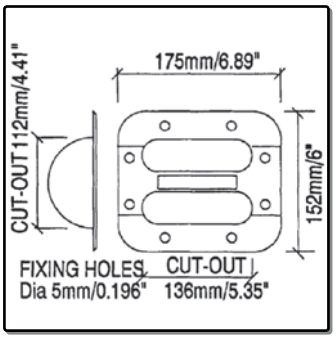

Schalengrif
Griffleiste: Aluminium Druckguß

Recessed Bar Handle
Handle: Aluminium Diecast

ABS/Dc.AL | 0,235 kg/St | Black

H1076

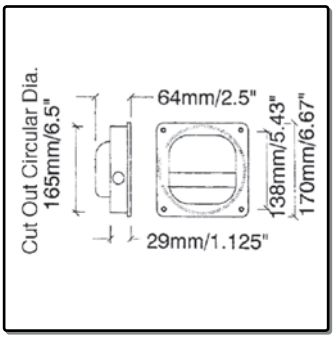

Schalengriff

Recessed Bar Handle

ABS | 0,235 kg/St | Black

H1028

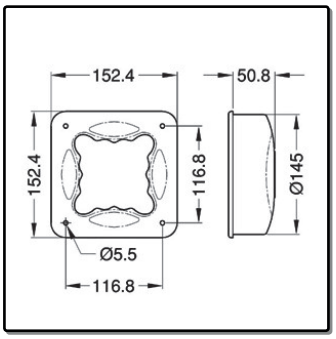

Schalengriff, allseitig einfassbar

Recessed 4 Way Plastic Pocket Handle

ABS | 0,178 kg/St | Black

H1028CUP/FXH

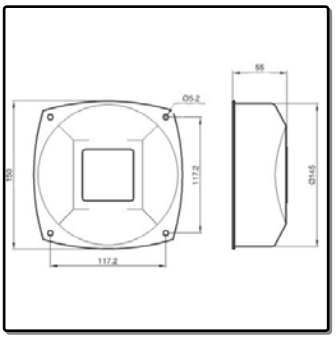

Haube zur rückseitigen Montage an H1028

Back cover for cabinets

ABS | 0,178 kg/St | Black

H1006

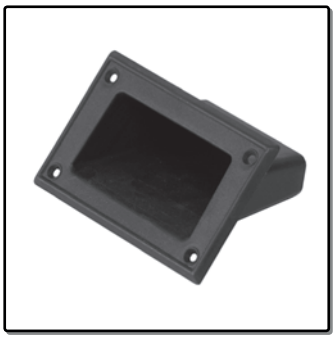

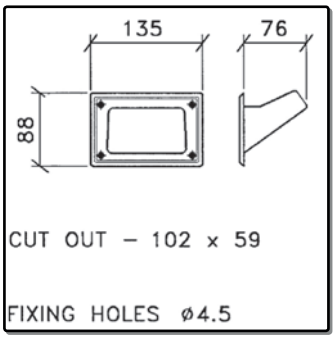

Muldengriff

Pocket Handle

ABS | 0,050 kg/St | Black

H102490

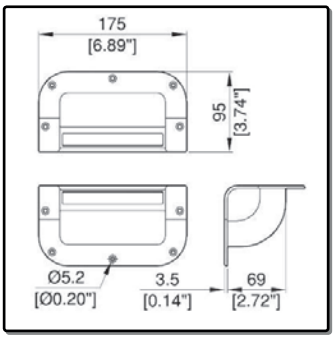

Kanten-Schalengriff
Griffleiste: Aluminium Druckguß

Corner Bar Handle
Handle: Aluminium Diecast

ABS/Dc.AL | 0,390 kg/St | Black

H1016

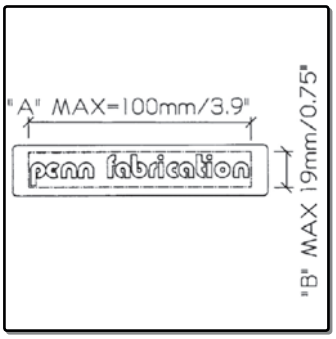

Label-Einkleber
für H1015, H1017 und H102490

Self Adhesive Name Tag
Fits H1015, H1017 and H102490

PVC | 0,010 kg/St | Black

M1704

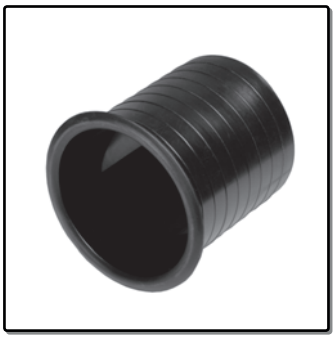

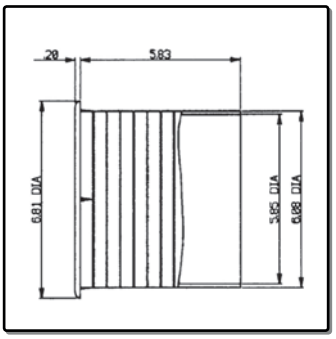

Bassreflexrohr
150mm

Port Tube
150mm

ABS | 0,226 kg/St | Black

M1703

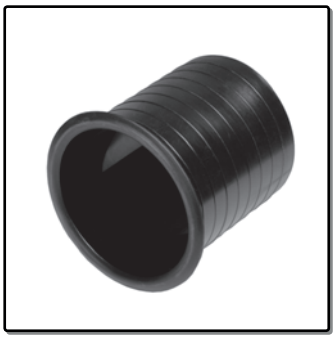

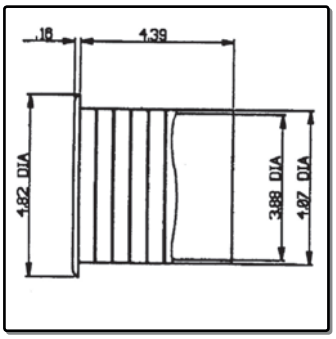

Bassreflexrohr
100mm

Port Tube
100mm

ABS | 0,080 kg/St | Black

M1702

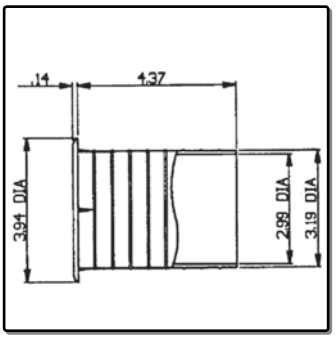

Bassreflexrohr
75mm

Port Tube
75mm

ABS | 0,050 kg/St | Black

M1701

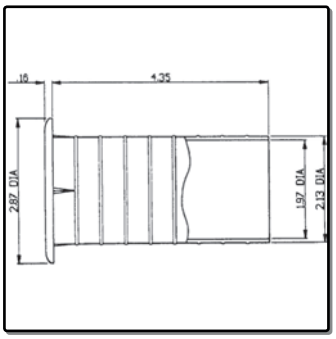

Bassreflexrohr
50mm

Port Tube
50mm

ABS | 0,040 kg/St | Black

M1557/M20

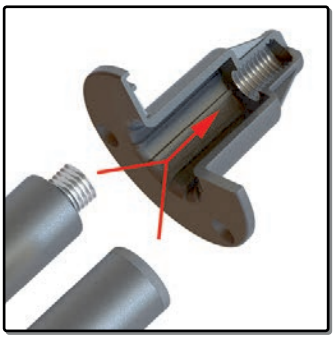

Hochständer-Hülse Stahl mit M20 Gewinde
35x80mm, für Ø 35mm Rohre

Steel Mounting Top Hat with M20 thread
35x80mm, Ø 35mm Steel Tube

Die Cast | | Black

M3555

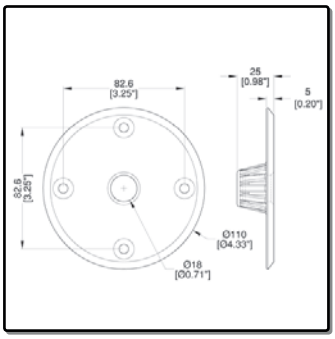

Hochständer-Hülse Stahl mit M20 Gewinde
passend zu M204306 und M204312

Steel Mounting Top Hat with M20 thread
fit Steel Tube M204306 and M204312

Die Cast *0,26o kg/St* *Black*

M204306 - M204312

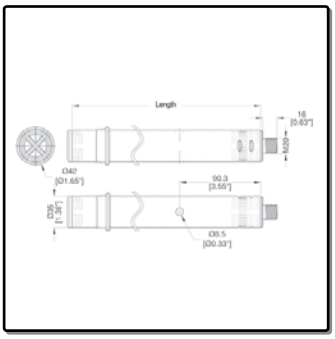

Rohrstück Ø 35mm mit M20 Gewinde
M204306: 600mm
M204312: 1200mm
Steel Tube, 35mm dia with M20 thread
M204306: 600mm
M204312: 1200mm

Steel *Black*

M1557

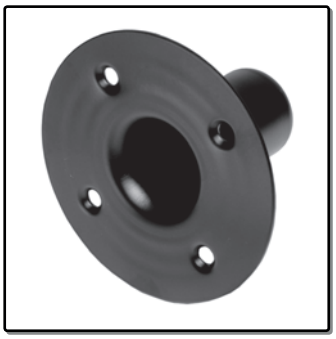

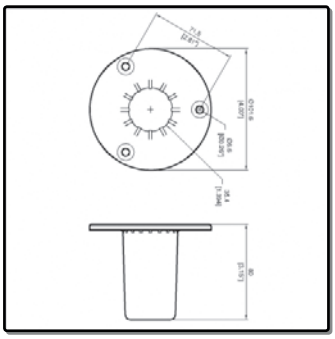

Hochständer-Hülse
35x80mm, für Ø 35mm Rohre

Zinc Die Cast Mounting Top Hat
35x80mm, Ø 35mm Steel Tube

Die Cast *0,269 kg/St* *Black*

M1551

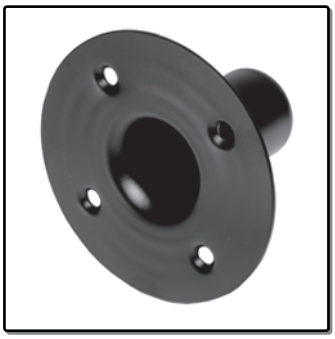

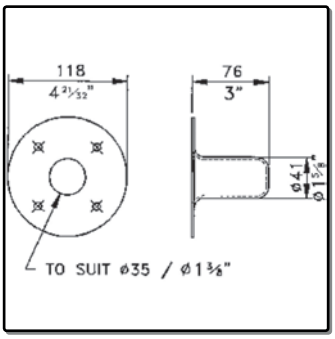

Hochständer-Hülse, Stahl
35x76mm, für Ø 35mm Rohre

Steel Mounting Top Hat
35x76mm, Ø 35mm Steel Tube

2.0mm Steel *0,269 kg/St* *Black*

M1538

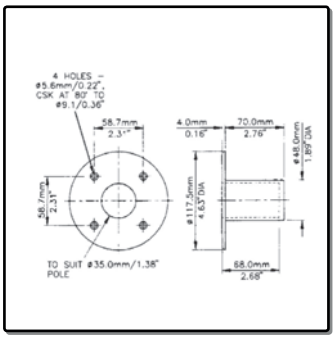

Hochständer-Hülse, Nylon
für Ø 35mm Rohre

Nylon Mounting Top Hat
Ø 35mm Steel Tube

ABS+Nylon *0,076 kg/St* *Black*

M154312

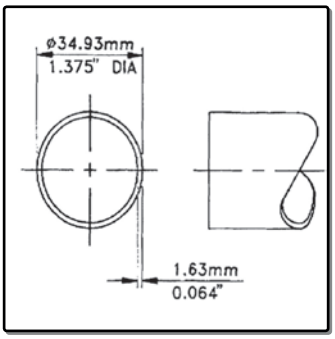

Rohrstück zu M1532ff
Ø 35x1200mm

Steel Tube for Speakercabinets
35x1200mm

Steel *1,000 kg/St* *Black*

R1737M

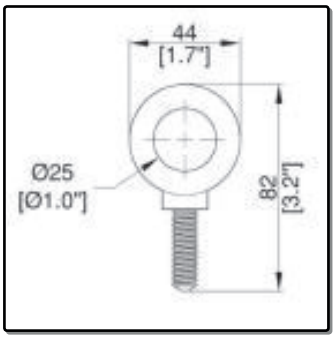

Schwere Flugöse, M10, bis 250kg

Forged Eye Bolt M10 - up to 250kg

Steel | 0,220 kg/St

R1738Mz

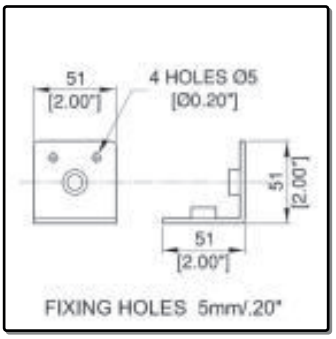

Innenwinkel mit M10-Gewinde

Interior Angle Bracket with M10 Threads

Steel | 0,140 kg/St | Zinc

R1437

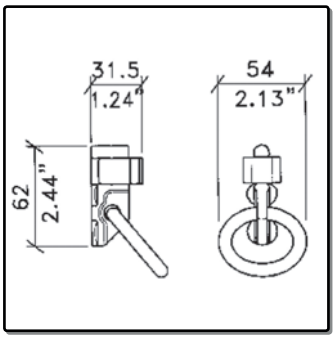

Flugöse für R1438

Double Stud Flying Point forR1438

Diecast AL | 0,174 kg/St | Black

R1434

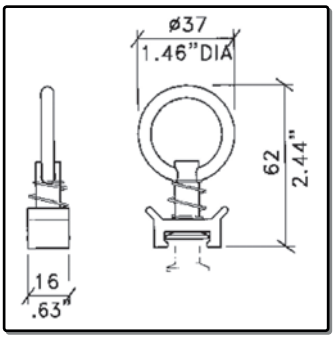

Flugöse für R1436/R1438

Single Stud Flying Point
to suit R1436/R1438

Diecast AL | 0,045 kg/St

R1438

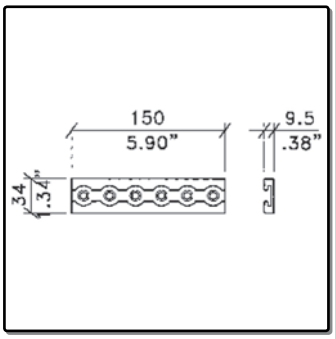

Rasterleiste für Flugösen, 150mm

"Flying" Track Extrusion 150mm

Diecast AL | 0,085 kg/St | Black

R1439

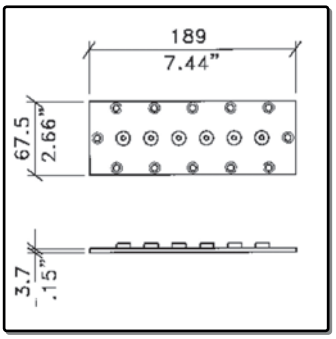

Schraubplatte zu R1438

Back Plate for use with R1438

Steel | 0,401 kg/St | Zinc

Boxen-Zubehör - Speaker Cabinet Fittings

R1436

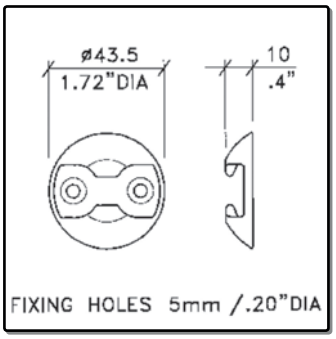

Flugösenhalter

Single Point Anchor Plate

Diecast AL *0,020 kg/St* *Black*

R1436/BP

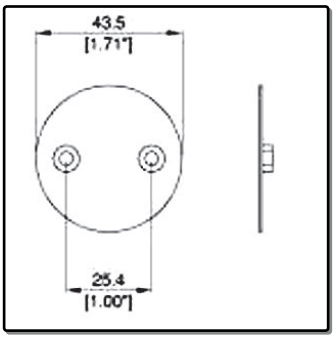

Gegenplatte zu R1436

Backplate for R1436

0.9mm Steel *0,025 kg/St* *Raw*

H1435z - H1435k

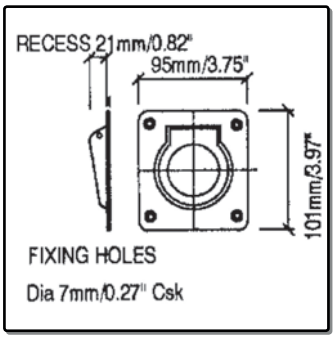

Flugöse
H1435z: Zink
H1435k: Schwarz
Snap Back Spring Shackle/ Roping Eye
H1435z: Zinc plated
H1435k: Black

Steel *0,358 kg/St* *Zinc or Black*

9910

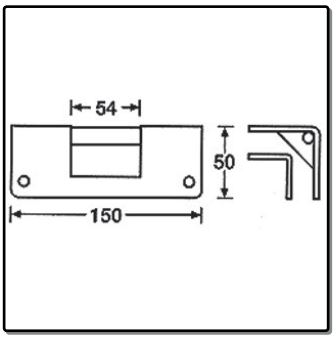

Spanngurtbefestigung
mit Gegenplatte

Recessed Rigging Bar with Back Plate

Steel *0,500 kg/St* *Black*

A1260

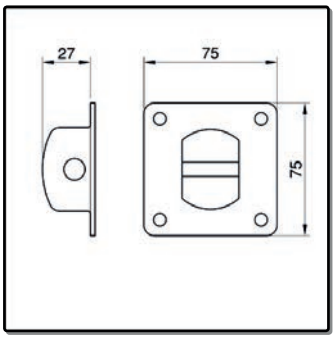

Gurtöse, starr

Roping Eye with no Moving Parts

Steel *0,155 kg/St* *Black*

D9802k

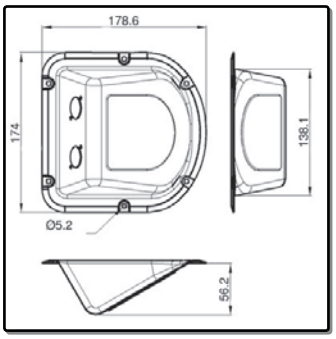

Einbauschale
2x Neutrik-D

Dish
2x Neutrik-D

1.2mm Steel | 0,368 kg/St | Black

D024

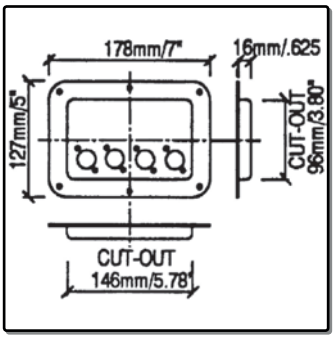

Einbauschale
4x Neutrik-D

Dish
4x Neutrik-D

1.2mm Steel | 0,300 kg/St | Black

D023k

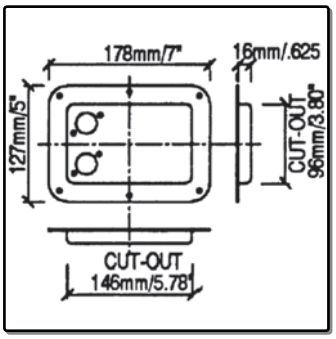

Einbauschale
2x Neutrik-D

Dish
2x Neutrik-D

1.2mm Steel | 0,300 kg/St | Black

D2101k-NLT4

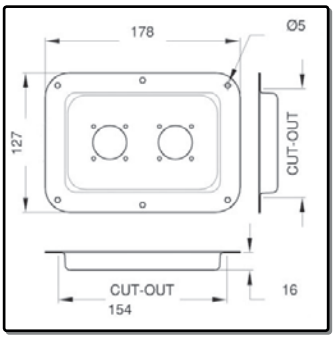

Einbauschale
2x NL4MPR oder NL8MPR

Dish
2x Neutrik NL4MP or NL8MPR

1.5mm Steel | 0,300 kg/St | Black

D0604z

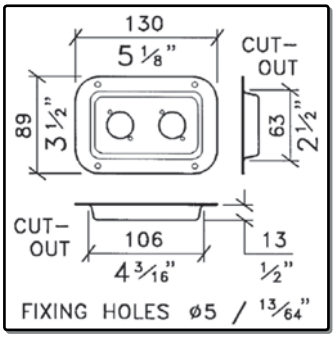

Einbauschale
2x Neutrik-D

Dish
2x Neutrik-D

1.2mm Steel | 0,130 kg/St | Zinc or Black

D0941/10z

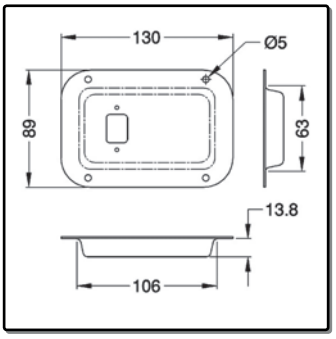

Einbauschale
für Netzstecker

Dish
1x IECC

1.2mm Steel | 0,130 kg/St | Zinc or Black

Boxen-Zubehör - Speaker Cabinet Fittings

D0946/10z

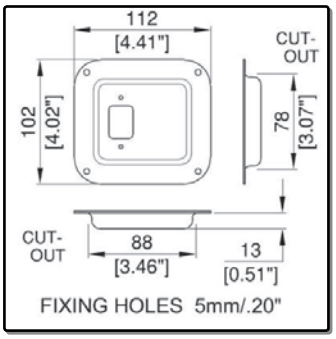

Einbauschale
für Netzstecker

Dish
1x IECC

1.2mm Steel *0,130 kg/St* *Zinc or Black*

7251

Einbau-Kaltgerätebuchse

Euro Chassis, male

Plastic *0,010 kg/St* *Black*

D0949z

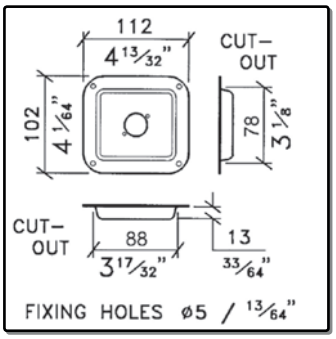

Einbauschale
1x Neutrik-D

Dish
1x Neutrik-D

1.2mm Steel *0,130 kg/St* *Zinc or Black*

D0947

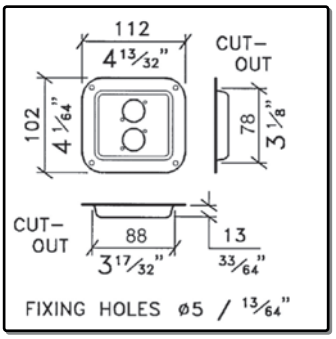

Einbauschale
2x Neutrik-D

Dish
2x Neutrik-D

1.2mm Steel *0,113 kg/St* *Zinc or Black*

sqm

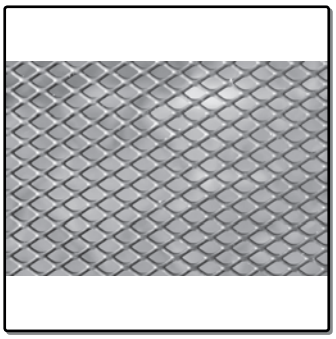

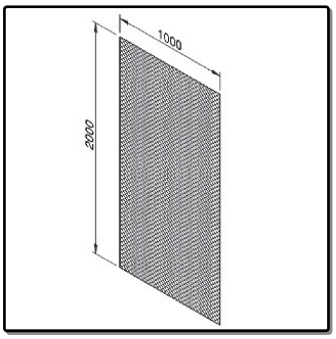

Gitterstahl 2000x1000x1.5mm
unbeschichetet

Sheet Perforated Steel, 7mm Mesh

Steel *6,000 kg/St* *Blank*

G06 - G18

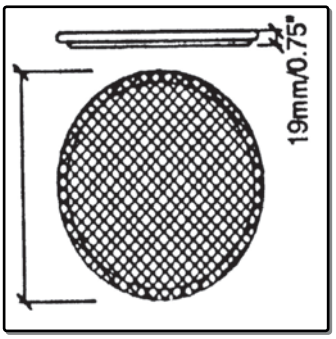

Lautsprechergitter rund, Stahl
6, 8, 10, 12, 15 und 18 Zoll

Speaker Grill
6", 8", 10", 12", 15" and 18"

Steel *0,520 kg/St* *Black*

G0710

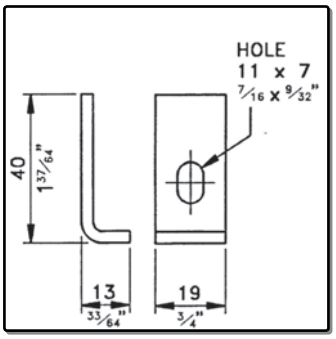

Gitterklammer, Stahl
40x13mm

Speaker Clamp
40x13mm

Steel *0.020 kg* *Black*

G0727

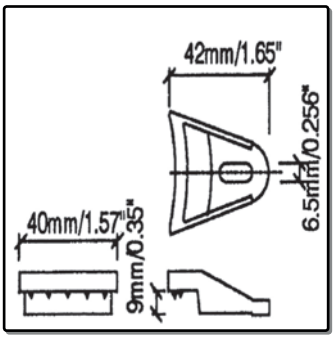

Gitterklammer, Kunststoff
42x9mm

Speaker Clamp
42x9mm

ABS *0,003 kg/St* *Black*

L0915-12k - 15k

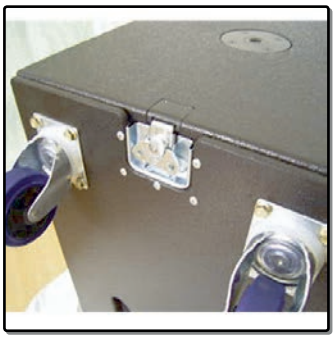

Einhaköse U-förmig
L0915-12k: 12mm Aufnahme
L0915-15k: 15mm Aufnahme
Castor Board Strike, U-Shaped
L0915-12k: suits 12mm wood
L0915-15k: suits 15mm Wood

1.5mm Steel *0,120 kg/St* *Black*

M5000 - M5005

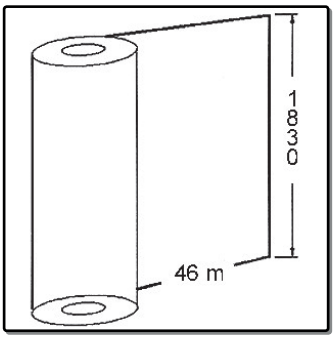

Hart-Vlies
M5000: grau (Rolle 1.83m x 46m)
M5005: schwarz (Rolle 1.83m x 46m)
Carpet Covering
M5000: Grey (Role 183cm x 46m)
M5005: Black (Role 183cm x 46m)

Carpet *0,340 kg/m²* *Grey or Black*

Server-Schrank / Server Rack Enclosures

Server-Schrank

Türe mit gehärtetem Glas.
Rack-Schienen in der Tiefe verstelbar.
Seitenteile abnehmbar.
Incl. Rollen und verstellbaren Füßen.
Kabeldurchlässe oben und unten.

Lüftereinheit als optinales Zubehör bestellbar.

Server Rack Enclosures

Tempered glass
Adjustable rack rail depth
Removable side panels
Comes with Castors and Feet
Cable entry knockouts on top and bottom
Pre-Assembled

Optional fan units available

***600mm Tiefe/*Depth:**

EMS-6622Bk	**22HE/Units**
EMS-6632Bk	**32HE/Units**
EMS-6642Bk	**42HE/Units**

***800mm Tiefe/*Depth:**

EMS-6822Bk	**22HE/Units**
EMS-6832Bk	**32HE/Units**
EMS-6842Bk	**42HE/Units**

***1000mm Tiefe/*Depth:**

EMS-61022Bk	**22HE/Units**
EMS-61032Bk	**32HE/Units**
EMS-61042Bk	**42HE/Units**

600mm Breit/Width
Steel/Black

Rack zur Wandmontage / Wall Mount Enclosures

Rack zur Wandmontage

Türe mit gehärtetem Glas.
Rack-Schienen in der Tiefe verstellbar.
Seitenteile abnehmbar.
Rückseite mit geschweißter Rahmenkontruktion.
Maximale Belastung 65kg.
Auch als Standgehäuse verwendbar.

Wall Mount Enclosures

Tempered glass
Adjustable rack rail depth
Removable side panels
Fixed back section with welded frame construction
Welded frame capable of holding 65Kg
Suitable for both wall mounting and standing installation

***250mm Tiefe/*Depth:**

WM-6206BK	**6HE/Units**
WM-6208BK	**8HE/Units**

***450mm Tiefe/*Depth:**

WM-6406BK	**6HE/Units**
WM-6409BK	**9HE/Units**
WM-6412BK	**12HE/Units**
WM-6418BK	**18HE/Units**

***600mm Tiefe/*Depth:**

WM-6606BK	**6HE/Units**
WM-6609BK	**9HE/Units**
WM-6612BK	**12HE/Units**
WM-6618BK	**18HE/Units**

600mm Breit/Width
Steel/Black

Rack zur Wandmontage / Double Section Wall Rack

Rack zur Wandmontage
- hinten aufklappbar -

Türe mit gehärtetem Glas.
Rack-Schienen in der Tiefe verstellbar.
Seitenteile abnehmbar.
Rückseite mit geschweißter Rahmenkontruktion.
Kabeldurchlässe oben, unten und hinten.

Double Section Deep Wall Rack

Tempered glass
Adjustable rack rail depth
Removable side panels
Hinged double section welded frame construction
Cable entry at rear, bottom and top of rack enclosure

600mm Tiefe/**Depth:**

DW-6606BK	6HE/Units
DW-6612BK	12HE/Units
DW-6618BK	18HE/Units

600mm Breit/Width
Steel/Black

Flat Pack Racks

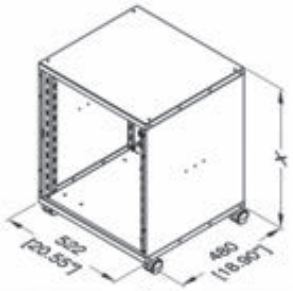

Rack	X	Rack	X
6U	320.1 / 12.6"	16U	764.6 / 30.1"
8U	409.0 / 16.1"	20U	942.4 / 37.1"
10U	497.9 / 19.6"	24U	1120.2 / 44.1"
12U	586.8 / 23.1"	28U	1298.0 / 51.1"

Flat Pack Racks

Doppelte Rackschiene
Double Rackstrip

***Schrank/*Rack:**

R8400/06	**6*HE/*Units**
R8400/08	**8*HE/*Units**
R8400/10	**10*HE/*Units**
R8400/12	**12*HE/*Units**
R8400/16	**16*HE/*Units**
R8400/20	**20*HE/*Units**
R8400/24	**24*HE/*Units**
R8400/28	**28*HE/*Units**

Fronttür mit Plexiglas,abschließbar
Clear Polycarbonate Door with Lock

R8450/06	**6*HE/*Units**
R8450/08	**8*HE/*Units**
R8450/10	**10*HE/*Units**
R8450/12	**12*HE/*Units**
R8450/16	**16*HE/*Units**
R8450/20	**20*HE/*Units**
R8450/24	**24*HE/*Units**
R8450/28	**28*HE/*Units**

Fronttür mit Lochgitter,abschließbar
Perforated Steel Door with Lock

R8460/06	**6*HE/*Units**
R8460/08	**8*HE/*Units**
R8460/10	**10*HE/*Units**
R8460/12	**12*HE/*Units**
R8460/16	**16*HE/*Units**
R8460/20	**20*HE/*Units**
R8460/24	**24*HE/*Units**
R8460/28	**28*HE/*Units**

R8480
Lenkrolle 50mm mit Bremse, zu R8400
Swivel with Brake 50mm suits R8400 serie

R8490k
Aufsatzklappgriff mit Befestigungsatz 2x, schwarz

Open Tower Rack System

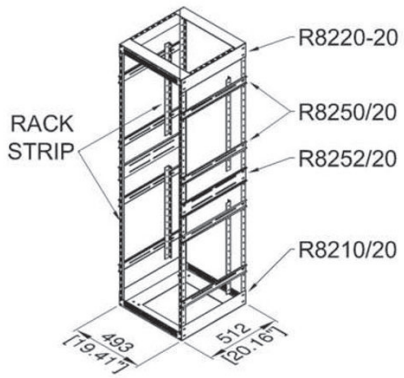

Open Tower Rack System
R8200 Serie

Offene Konstruktion.
Verwendbar mit doppelter Rackschiene 6145.
Höhe durch ablängen der Rackschiene frei wählbar.

Allows for maximum air flow to rack mount equipment.
Easy assembling with
Double Rackstrip 6145
Every variation in Units is possible

R8210/20
Bodenplatte zum R8200-Racksystem
Base Unit for R8200 System

R8220/20
Deckenplatte zum R8200-Racksystem
Top Unit for R8200 System

R8250/20
Einfache Querstrebe zum R8200-System
Single Cross Brace

R8252/20
Doppelte Querstrebe zum R8200-System
Double Cross Brace

R8292
Schraubensatz zum R8200-System
Set of screws for R8200 System

R8295
Höhenverstellbare Füße zum R8200-System
Set of adjustable height feet

W0990/80, W0985/80, W0990, W0985
Rollen zum R8200 System
Castors for R8200 System

Schubladen mit Schloß / Rackdrawers with Lock

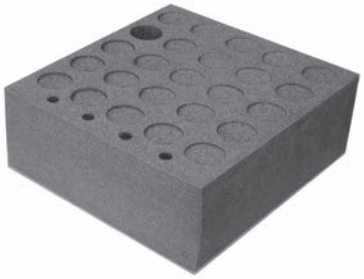

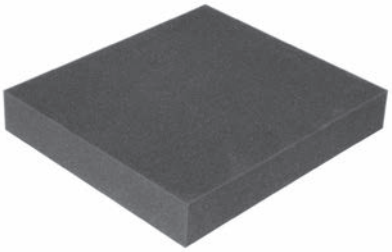

Schubladen mit Schloß
Rackdrawers with Lock

***254mm Tiefe/*Depth:**

R1292k/10	2HE/Units
R1293k/10	3HE/Units
R1294k/10	4HE/Units

*Innenmaße/*Internal Dimensions:

2HE/Units	41x26x7mm
3HE/Units	41x26x11.5mm
4HE/Units	41x26x16mm

***367mm Tiefe/*Depth:**

R1292k	2HE/Units
R1293k	3HE/Units
R1294k	4HE/Units
R1295k	5HE/Units
R1296k	6HE/Units

*Innenmaße/*Internal Dimensions:

2HE/Units	41x36.5x7mm
3HE/Units	41x36.5x11.5mm
4HE/Units	41x36.5x16mm
5HE/Units	41x36.5x20mm
6HE/Units	41x36.5x25mm

***450mm Tiefe/*Depth:**

R1292k/18	**2HE/Units**
R1293k/18	**3HE/Units**
R1294k/18	**4HE/Units**

*Innenmaße/*Internal Dimensions:

2HE/Units	41x45x7mm
3HE/Units	41x45x11.5mm
4HE/Units	41x45x16mm

Steel, Black

6586M/2
Mikrofon-Einsatz für 6HE-Lade R1296k
6U Microphone Inlay. Suits R1296k

6582r
Rasterschaumeinsatz für 2HE-Schublade R1292k
2U Foam Insert for 2U Drawer R1292k

FU-EM-800-1000

Lüftereinheit für EMS-Server-Schränke
FU-EM-800: 800mm tiefe
FU-EM-1000: 1000mm tiefe
4 Fan unit for EMS Server Enclosure
FU-EM-800: 800mm deep Rack
FU-EM-1000: 1000mm deep Rack

Steel *3,000 kg/St* *Black*

FU-EM-600

Lüftereinheit für 600mm tiefe
EMS-Server-Schränke mit 2 Lüftern

2 Fan unit for 600mm deep EMS Server enclosure

Steel *3,000 kg/St* *Black*

FT-01-Q

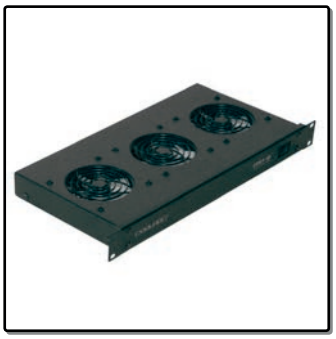

1HE-Lüftungseinheit mit 3 Lüftern
Montage wahlweise als 1HE-horizontal oder 6HE-vertikal
1U Fanunit with 3 low noise Blowers
Can be used as 1U horizontal tray or vertically as 6U Blower

Steel *3,000 kg/St* *Black*

Coolrac

1HE-Lüftungseinheit mit 3 geräuchsarmen Mini-Ventilatoren
Höhe hinten nur 0.5HE
1U Fanunit with 3 low noise mini blowers
Rear only 0.5U height

Steel *3,000 kg/St* *Black*

6551

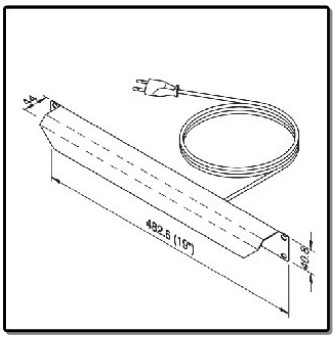

1HE-Racklight mit Schalter

1U Racklite with Switch On/Off

Steel *0,770 kg/St* *Black*

6549

1HE-Racklight mit Dimmer- 2 LED Lampen

1U Racklite with Dimmer- 2 LED Lamps

Steel *1,000 kg/St* *Black*

6518 - 6518FR

1HE-Leiste mit 8 Steckdosen
6518: mit SCHUKO-Steckdosen
6518FR: französische/belgische Erde
1U Powerbox, 8x Front
6518: SCHUKO Socket
6518FR: French/Belgium Socket

Steel *0,700 kg/St* *Black*

6516 - 6516FR

1HE-Leiste mit 8 Steckdosen und Schalter
6516: mit SCHUKO-Steckdosen
6516: französische/belgische Erde
1U Powerbox, 8x Front + Switch On/Off
6516: SCHUKO Socket
6516FR: French/Belgium Socket

Steel *0,700 kg/St* *Black*

6517

1HE-Leiste, 8 rückseitige Dosen
Schalter frontseitig

1U Powerbox, Switch On/Off Front
+ 8 x Rear

Steel *0,700 kg/St* *Black*

R1380/2UK - 4Uk

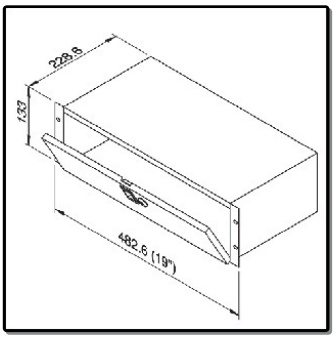

Schließfach, 228mm tief
2, 3 und 4HE

Lockable Rack Vault, 228mm Deep
2U, 3U and 4U

Steel *3,2 kg (2U)* *Black*

R2100/1Uk - 4Uk

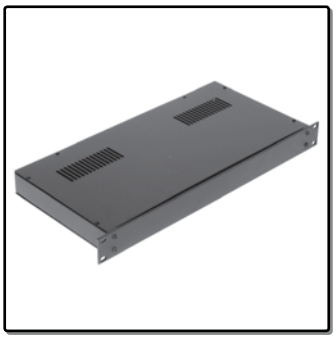

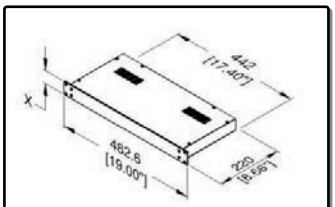

RACK BOX	X
1U	44.4 / 1.75"
2U	88.9 / 3.50"
3U	133.4 / 5.25"
4U	177.8 / 7.00"

19"-Leergehäuse, 220mm tief
1, 2, 3 und 4HE
Rackblende aus 3mm Aluminium
19" Rack Box, 220mm Deep
1U, 2U, 3U and 4U
Rackpanel 3mm Aluminium

Steel/Alu. *3,06 kg (2U)* *Black*

R2110/1Uk - 4Uk

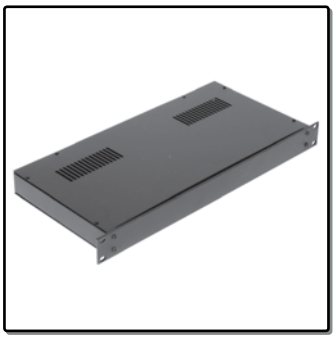

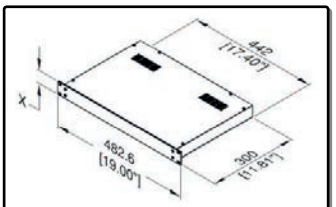

RACK BOX	X
1U	44.4 / 1.75"
2U	88.9 / 3.50"
3U	133.4 / 5.25"
4U	177.8 / 7.00"

19"-Leergehäuse, 300mm tief
1, 2, 3 und 4HE
Rackblende aus 3mm Aluminium
19" Rack Box, 300mm Deep
1U, 2U, 3U and 4U
Rackpanel 3mm Aluminium

Steel/Alu. *3,06 kg (2U)* *Black*

R1194/2Uk-SL

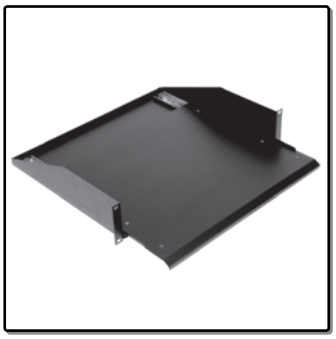

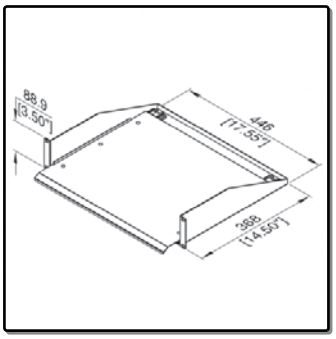

2HE-ausziehbarer Stellboden

2U Sliding Rack Shelf

Steel *6,000 kg/St* *Black*

R1292-KBT

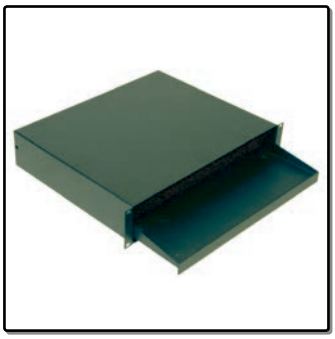

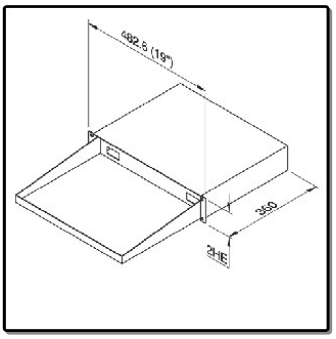

2HE-Tastatur-Auszug

2U Keyboard Tray

Steel *7,200 kg/St* *Black*

R1291k

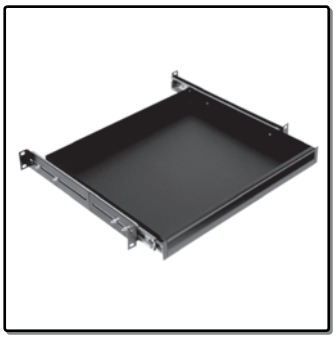

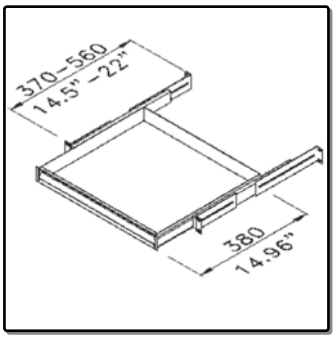

1HE-Schreibplatte und Schublade

1U Rack Drawer or Writing/Mouse Table

Steel *3,000 kg/St* *Black*

R1291k/2L

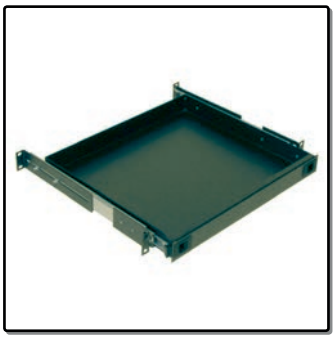

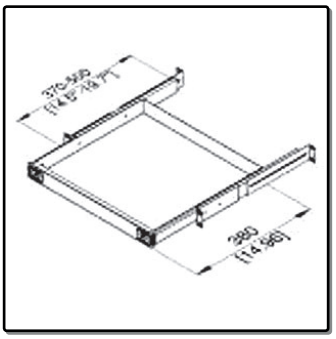

1HE-Schreibplatte und Schublade
verriegelbar

1U Rack Drawer or Writing Table, Locks

Steel *3,500 kg/St* *Black*

R1290/1U

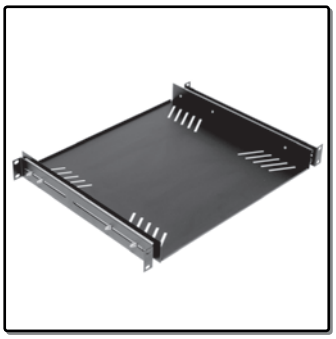

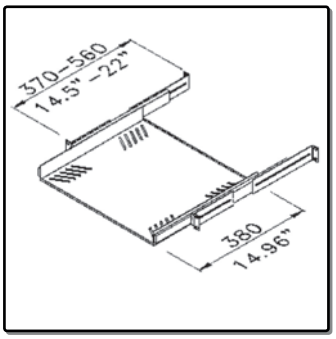

1HE-ausziehbarer Stellboden

1U Sliding Rack Shelf

Steel *3,400 kg/St* *Black*

EX-6301B

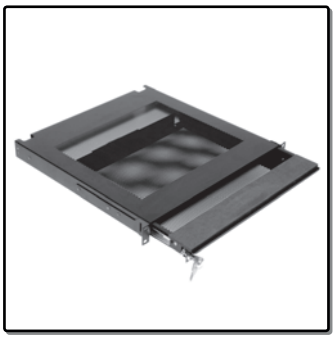

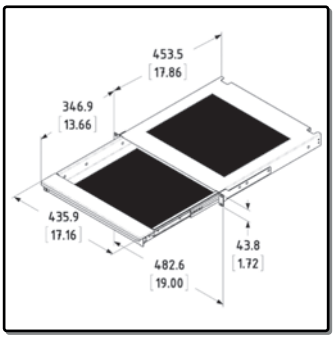

1HE-Laptop-Lade
Mit Kabeldurchlass hinten und Mousepad

1U Laptop Drawer
with Foam Wrist-pad and Rear Cable Acces

Steel *4,785 kg/St* *Black*

R1194/1Uk - 4Uk

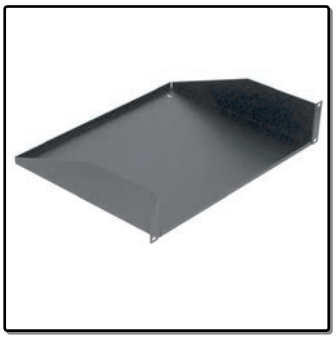

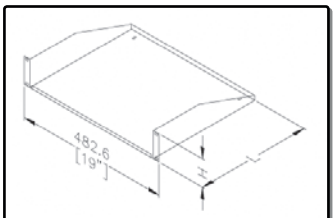

SHELF	H	L
1U	44.4 / 1.75"	272.0 / 10.7"
2U	88.9 / 3.50"	368.2 / 14.5"
3U	133.4 / 5.25"	368.2 / 14.5"
4U	177.8 / 7.00"	368.2 / 14.5"

Stellböden zur Frontmontage
1, 2, 3 und 4HE

Rack Shelf
1U, 2U, 3U and 4U

Steel *2,5 kg (2U)* *Black*

R1191/1Uk

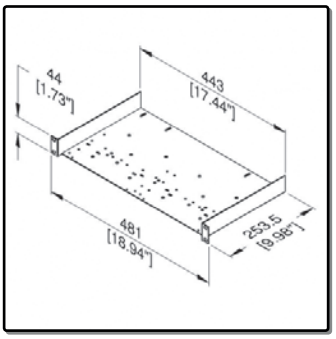

1HE-Stellboden, gestanzt
diverse Geräte-Befestigungsmöglichkeiten

1U Rack Shelf, Prepunched
Several Possibilities to Fix Equipment

Steel *1,820 kg/St* *Black*

R8010

Rack, ausziehbar und drehbar
mit Kabelmanagement
verwendbar mit Rackschiene 6145
Slide and rotate Rack with Cable
management bar (Rackstrip not included)
Use Rackstrip 6145

Steel *Black*

R2510/1U - 4U

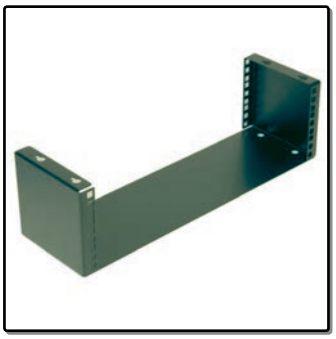

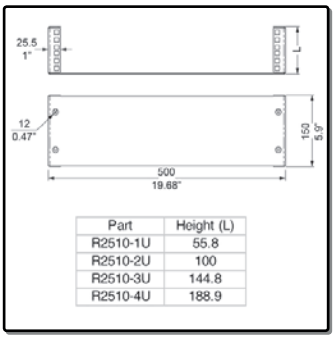

Part	Height (L)
R2510-1U	55.8
R2510-2U	100
R2510-3U	144.8
R2510-4U	188.9

Untertisch- oder Wandhalter für
19" Geräte
1, 2, 3 und 4HE
Rack Mount Wall Bracket. For mounting
19" products on walls or under tables
1U, 2U, 3U and 4U

Steel/Alu. *Black*

R1206/1Uk - 4Uk

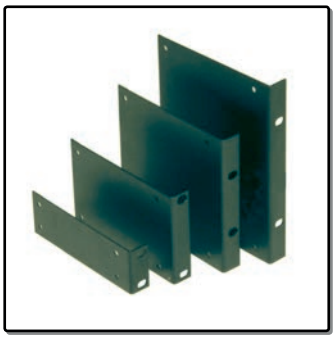

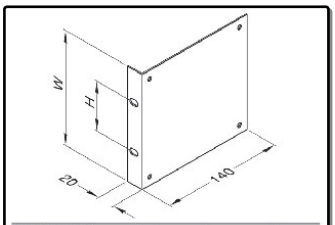

BRACKET	W	H
1U	44.4	31.75
2U	88.9	76.20
3U	133.4	57.15
4U	177.8	101.60

19"-Montagewinkelpaar
1, 2, 3 und 4HE

Rack Mounting Brackets, Pair
1U, 2U, 3U and 4U

Steel *0,163 kg/P.* *Black*

R1305

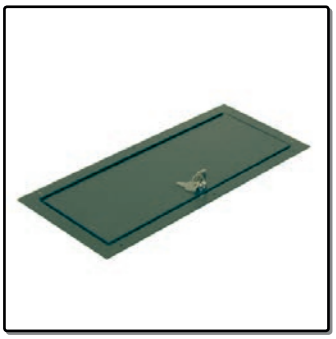

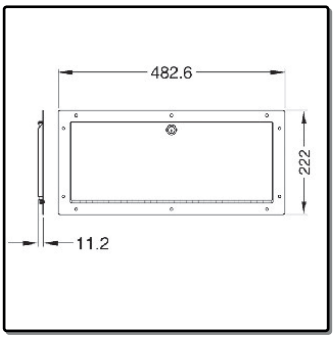

5HE-Serviceklappe, abschließbar

5U Rack Door, Lockable

Steel *1,500 kg/St* *Black*

Rackblende / Rackpanels

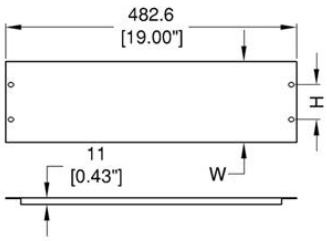

PANEL	W	H
½U	22.2 / 0.87"	-
1U	44.4 / 1.75"	31.75 / 1.25"
2U	88.9 / 3.50"	76.20 / 3.00"
3U	133.4 / 5.25"	57.15 / 2.25"
4U	177.8 / 7.00"	101.60 / 4.00"
5U	222.2 / 8.75"	82.55 / 3.25"
6U	266.6 / 10.5"	127.00 / 5.00"

R1268/.Uk

Stahl: U-Rackblende, schwarz
Steel: U-Shaped Rackpanel, Black

R1268/05Uk	0.5*HE*/Unit
R1268/1Uk	1*HE*/Unit
R1268/2Uk	2*HE*/Units
R1268/3Uk	3*HE*/Units
R1268/4Uk	4*HE*/Units
R1268/5Uk	5*HE*/Units
R1268/6Uk	6*HE*/Units

1.2mm Steel

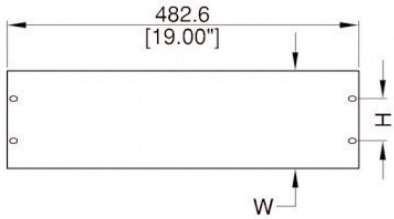

PANEL	W	H
1U	44.4 / 1.75"	31.75 / 1.25"
2U	88.9 / 3.50"	76.20 / 3.00"
3U	133.4 / 5.25"	57.15 / 2.25"
4U	177.8 / 7.00"	101.60 / 4.00"

R1285/.Uk

Stahl: Rackblende flach, schwarz
Steel: Flat Rackpanel, Black

R1285/1Uk	1*HE*/Unit
R1285/2Uk	2*HE*/Units
R1285/3Uk	3*HE*/Units
R1285/4Uk	4*HE*/Units

1.5mm Steel

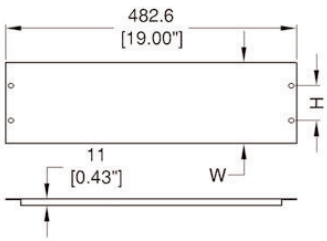

PANEL	W	H
1U	44.4 / 1.75"	31.75 / 1.25"
2U	88.9 / 3.50"	76.20 / 3.00"
3U	133.4 / 5.25"	57.15 / 2.25"

R1267/.Uk

Aluminium: U-Rackblende, schwarz
Aluminium: U-Shaped Rackpanel, Black

R1267/1Uk	1*HE*/Unit
R1267/2Uk	2*HE*/Units
R1267/3Uk	3*HE*/Units

1.8mm Aluminium

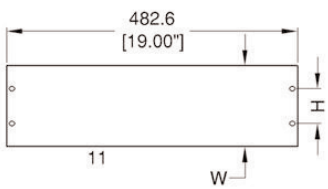

PANEL	W	H
½U	22.2 / 0.87"	-
1U	44.4 / 1.75"	31.75 / 1.25"
2U	88.9 / 3.50"	76.20 / 3.00"
3U	133.4 / 5.25"	57.15 / 2.25"
4U	177.8 / 7.00"	101.60 / 4.00"
5U	222.2 / 8.75"	82.55 / 3.25"
6U	266.6 / 10.5"	127.00 / 5.00"

R1275/.Uk

Aluminium: Rackblende flach, schwarz
Aluminium: Flat Rackpanel, Black

R1275/05Uk	0.5*HE*/Unit
R1275/1Uk	1*HE*/Units
R1275/2Uk	2*HE*/Units
R1275/3Uk	3*HE*/Units
R1275/4Uk	4*HE*/Units
R1275/5Uk	5*HE*/Units
R1275/6Uk	6*HE*/Units

3.0mm Aluminium

R1286/0.5UVk- 4UVk

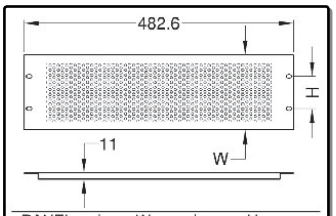

PANEL	W	H
½U	22.2	-
1U	44.4	31.75
2U	88.9	76.20
3U	133.4	57.15
4U	177.8	101.60

Stahl U-Racklüftungsblende
0.5, 1, 2, 3 und 4HE

Steel Vented U-Shaped Rackpanel
0.5U, 1U, 2U, 3U and 4U

1.2mm Steel *0.34 kg (2U)* *Black*

R1279/1Uk - 2Uk

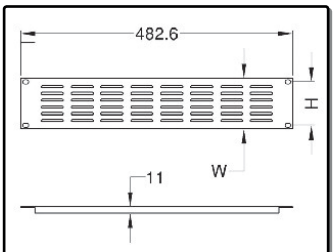

PANEL	W	H
1U	44.4	31.75
2U	88.9	76.20

Stahl U-Racklüftungsblende
1 und 2HE

Steel Vented U-Rackpanel
1U and 2U

1.2mm Steel *0,41 kg (2U)* *Black*

R1267/1UVk - 3UVk

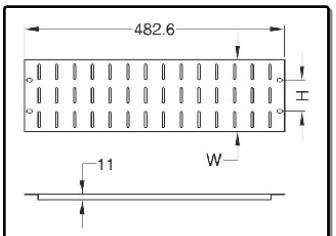

PANEL	W	H
1U	44.4	31.75
2U	88.9	76.20
3U	133.4	57.15

Aluminium U-Racklüftungsblende
1, 2 und 3HE

Aluminium Vented U-Shaped Rackpanel
1U, 2U and 3U

1.8mm Alu. *0.21kg (2U)* *Black*

RI-0145

3HE-Rackblende, 2 x 125A

3U Rackpanel, 2 x 125A

2.0mm Steel *1,120 kg/St* *Black*

RI-0143

3HE-Rackblende, 2 x 63A

3U Rackpanel, 2 x 63A

2.0mm Steel *1,120 kg/St* *Black*

RI-0155

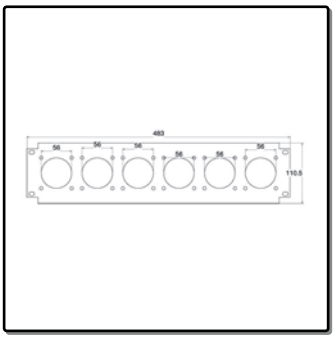

2HE-Rackblende 6 Löcher Ø 56mm

2U Rackpanel, 6 x 56mm Diameter

2.0mm Steel *0,560 kg/St* *Black*

RI-0156

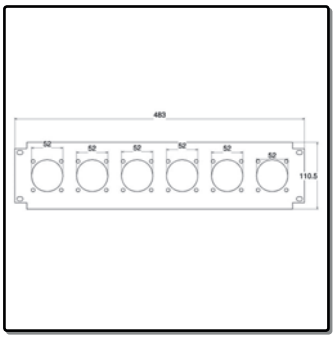

2HE-Rackblende 6 Löcher Ø 52mm

2U Rackpanel, 6 x 52mm Diameter

2.0mm Steel *0,560 kg/St* *Black*

RI-0152

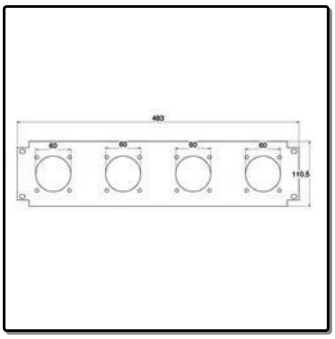

2HE-Rackblende, 4 x 32A

2U Rackpanel, 4 x 32A

2.0mm Steel *0,640 kg/St* *Black*

RI-0154

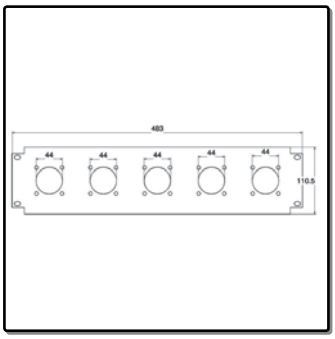

2HE-Rackblende für 5 Powerlock 400A

2U Rackpanel, 5 x Powerlock 400A

2.0mm Steel *0,680 kg/St* *Black*

RI-0047

2HE-Rackblende für 2 Harting 16/40/72

2U Rackpanel, 2 x Harting 16/40/72

2.0mm Steel *0,640 kg/St* *Black*

RI-0055 - RI-0056

Blindplatte
RI-0055: für Harting 16/40/72
RI-0056: für Harting 24/64/108
Cover Plate
RI-0055: suits Harting 16/40/72
RI-0056: suits Harting 24/64/108

Steel *0,070 kg/St* *Black*

R1284/3Uk-12

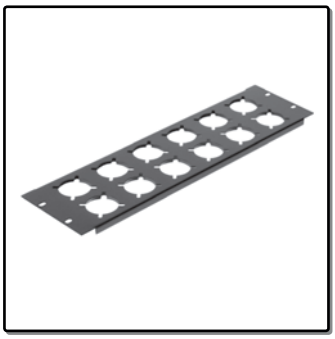

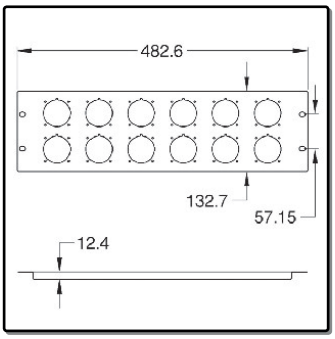

3HE-Blende für 12 Schuko-Dosen

3U Rack Panel, 12 x Schuko

Steel *0,450 kg/St* *Black*

R1284/2Uk

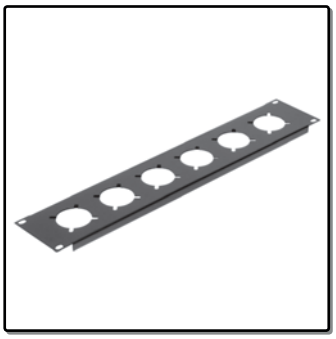

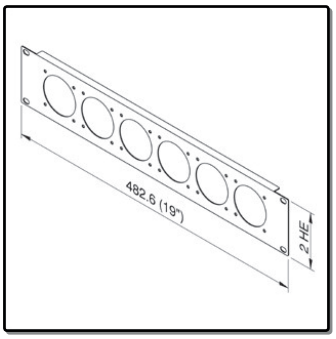

2HE-Blende für 6 Schuko-Dosen

2U Rack Panel, 6 x Schuko

Steel *0,350 kg/St* *Black*

7250

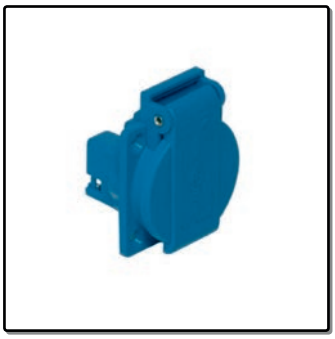

Schuko Steckdose Blau, Einbau

Schuko Socket, blue

Plastic *0,038 kg/St* *Blue*

R1269/1Uk - 3Uk

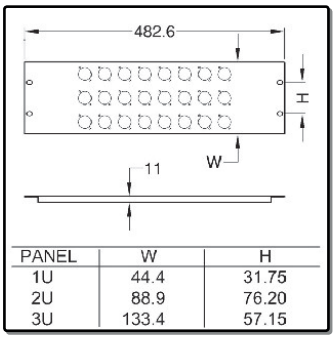

PANEL	W	H
1U	44.4	31.75
2U	88.9	76.20
3U	133.4	57.15

U-Rackblende für 4 - 8 Neutrik D pro HE
1HE (1x4,1x6,1x8), 2HE (2x8), 3HE (3x8)

U-Shaped Rackpanel, 4 - 8 Neutrik D/Unit
1U (1x4,1x6,1x8), 2U (2x8), 3U (3x8)

1.2mm Steel *0,42 kg (2U)* *Black*

R1269/1Uk/12- 3Uk/

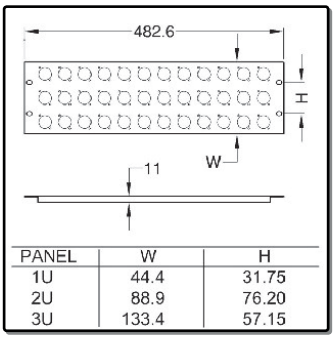

PANEL	W	H
1U	44.4	31.75
2U	88.9	76.20
3U	133.4	57.15

U-Rackblende für 12 Neutrik D pro HE
1HE (1x12), 2HE (2x12), 3HE (3x12)

U-Shaped Rackpanel, 12 Neutrik D/Unit
1U (1x12), 2U (2x12), 3U (3x12)

1.2mm Steel *0,42 kg (2U)* *Black*

R1269/1Uk/16- 3Uk/

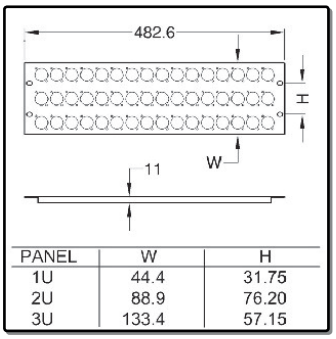

PANEL	W	H
1U	44.4	31.75
2U	88.9	76.20
3U	133.4	57.15

U-Rackblende für 16 Neutrik D pro HE
1HE (1x16), 2HE (2x16), 3HE (3x16)

U-Shaped Rackpanel, 16 Neutrik D/Unit
1U (1x16), 2U (2x16), 3U (3x16)

1.2mm Steel *0,42 kg (2U)* *Black*

R1269/1Uk/08CTF

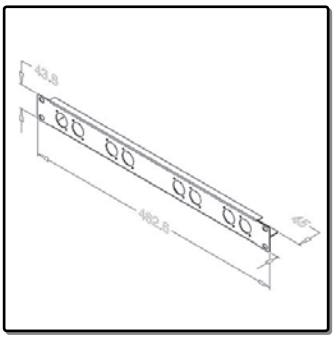

1HE-Rackblende, 8 Neutrik D,
Kabelbesfestigung

1U Rackpanel, 8 x Neutrik D,
CableTie Flange

1.2mm Steel *0,256 kg/St* *Black*

R1282/1U

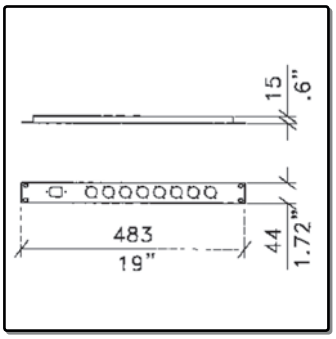

1HE-Blende, 8x Neutrik D + 1x Euro-Netz

1U Rackpanel, 8x Neutrik D + 1 IECC

1.2mm Steel *0,210 kg/St* *Black*

S1905/11

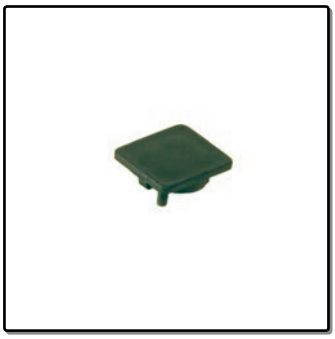

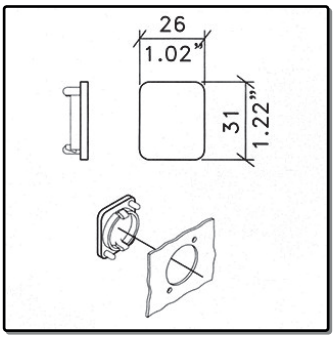

Blindplatte für Neutrik-D-Ausfräsungen

Blanking Plug for Neutrik D

Plastic *0,002 kg/St* *Black*

R1268/1Uk/05TR

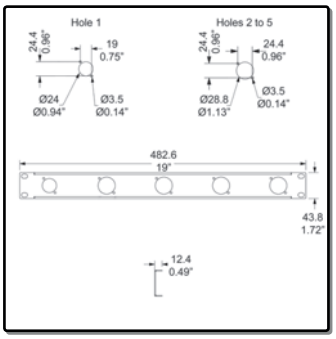

1HE-Rackblende, 5 Neutrik Powercon True1

1U Rackpanel, 5 Neutrik Powercon True1

1.2mm Steel *0,210 kg/St* *Black*

R1280/1Uk

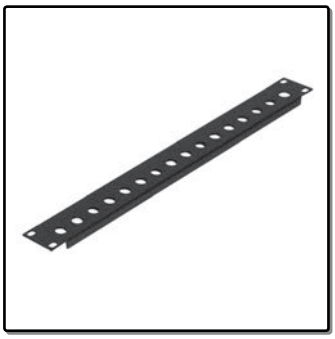

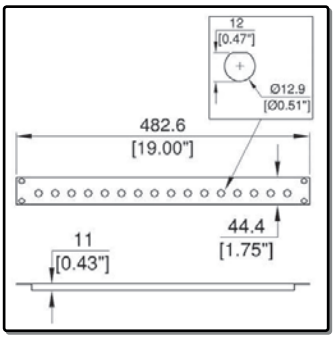

1HE-Rackblende für BNC-Video-Connectoren

1U Rackpanel for BNC-Video-Connectors

1.2mm Steel *0,285 kg/St* *Black*

R1268/1Uk/CTB - 2U

Kabel-Zugentlastung
R1268/1Uk/CTB: 1HE
R1268/2Uk/CTB: 2HE
Cable Tie Bar Kit
R1268/1Uk/CTB: 1HE
R1268/2Uk/CTB: 2HE

Steel *Black*

R1307 - R1309

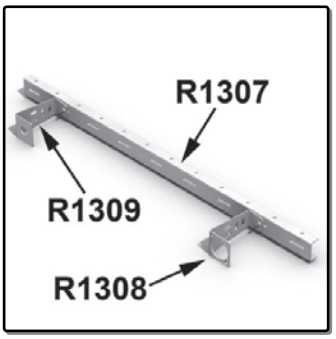

R1307: Zugentlastung für Rackblende
R1308: Aufhängung für Neutrik D
R1309: Aufhängung für Jack
R1307: Cable Support
R1308: Cable Support for Neutrik D
R1309: Cable Support for Jack

Steel *0,138 kg/St* *Black*

RI-0100/sp1

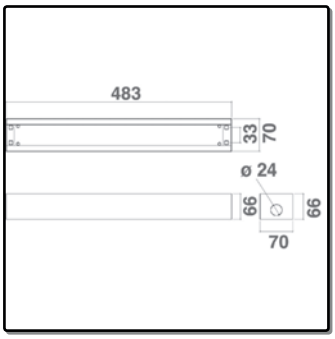

1HE-19" Box (ohne Rackblende)

1U 19" Box (without Rackpanel)

Steel 1,450 kg/St Black

RI-0100/sp2

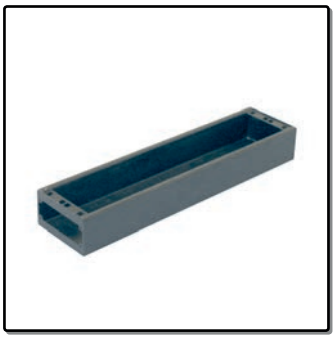

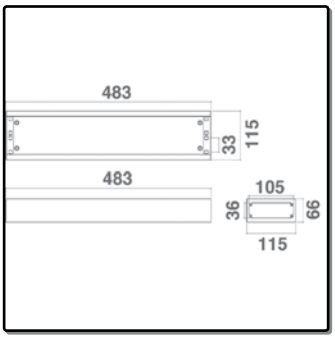

2HE-19" Box (ohne Rackblende)

2U 19" Box (without Rackpanel)

Steel 1,760 kg/St Black

RI-0100/sp3

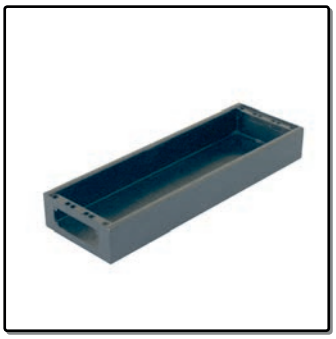

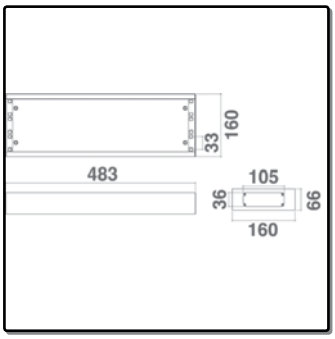

3HE-19" Box (ohne Rackblende)

3U 19" Box (without Rackpanel)

Steel 2,100 kg/St Black

RI-0100/sp4

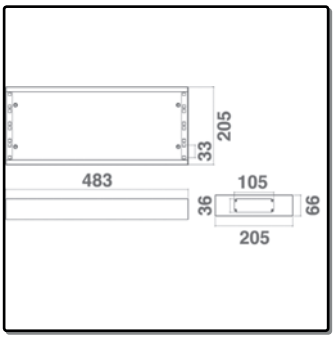

4HE-19" Box (ohne Rackblende)

4U 19" Box (without Rackpanel)

Steel 2,520 kg/St Black

G1701 - G1703

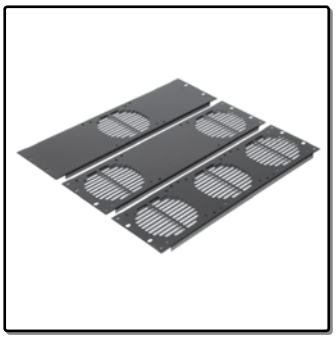

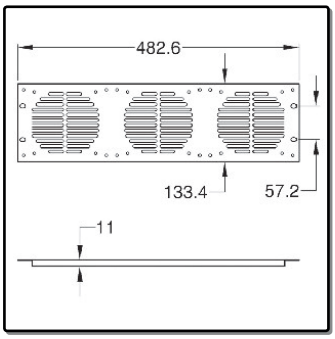

3HE-Befestigungsblenden für Axial-Lüfter
G1701 = 1 AL, G1702 = 2 AL
G1703 = 3 AL
3U Fan Panels
G1701=1 Fan, G1702=2 Fan, G1703= 3 Fan

Steel 0.180 kg Black

6339

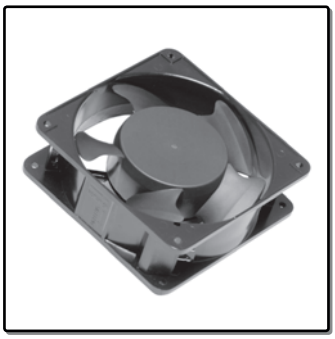

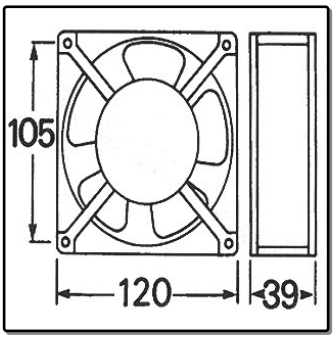

Axial-Lüfter, 240V, 2800 U/MIN
passend zu G1701, G1702 und G1703

Fan, 240V, 2800 U/MIN, 120x120
Fits Rackpanel G1701, G1702 and G1703

Steel 0,543 kg/St Black

R1272/2Uk - 4Uk

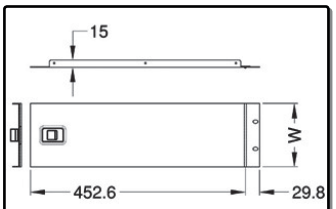

PANEL	W
2U	88.9
3U	133.4
4U	177.8

Racktür mit ABS-Riegel
2, 3 und 4HE

Rack Door with Slam Lock
2U, 3U and 4U

1.2mm Steel *0,45 kg (2U)* *Black*

R1272/2UVk - 6UVk

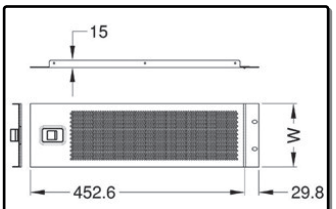

PANEL	W
2U	88.9
3U	133.4
4U	177.8

Racklüftungstür mit ABS-Riegel
2, 3, 4 und 6HE

Ventilation Rack Door with Slam Lock
2U, 3U, 4U and 6U

1.2mm Steel *0,39 kg (2U)* *Black*

R1287/1Uk - 3Uk

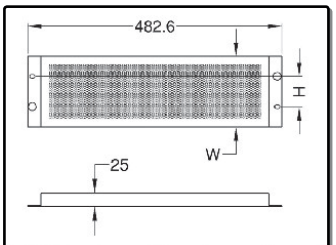

PANEL	W	H
1U	44.4	31.75
2U	88.9	76.20
3U	133.4	57.15

Bedienschutzblende
1, 2 und 3HE

Security Panel
1U, 2U and 3U

Steel *0,32 kg (2U)* *Black*

R1268/1Uk-PBS - 2U

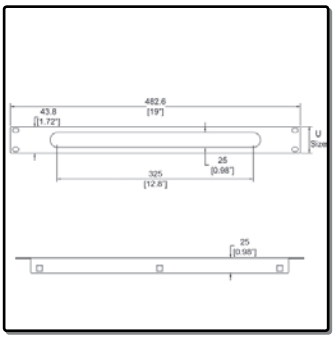

Kabeldurchlass mit Borstensperre
1HE = R1268/1UK-PBS
2HE = R1268/2Uk-PBS
Panel, Cable Access Slot with brushes
1U = R1268/1Uk-PBS
2U = R1268/2Uk-PBS

1.2mm Steel *0,40 kg (1U)* *Black*

R1268KB

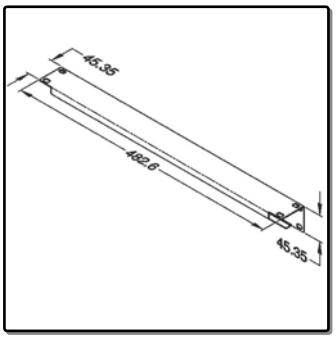

1HE/1HE Winkelblende

Rackpanel, 2x 1U in 90°

1.2mm Steel *0,450 kg/St* *Black*

R1299/3Uk

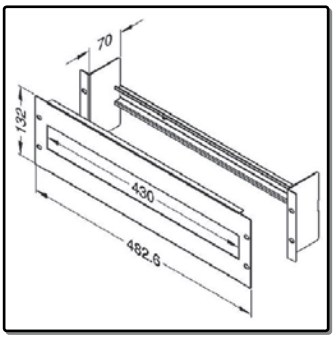

3HE-Sicherungsautomaten-Träger

3U Housing for Fuse Switches

Steel *0,900 kg/Set* *Black*

Rackzubehör - 19" Racking

CMU-1

1HE-Kabel-Management

1U Rack Panel, ring Cable Manager panel with 5 plastic Rings for cable-manager

1.2mm Steel *0,256 kg/St* *Black*

ID Strip

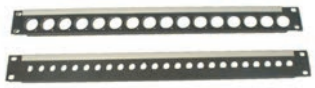

ID Strip selbstklebend 435mm

Self Adhesive ID Strip 435mm

Plastic

R1311

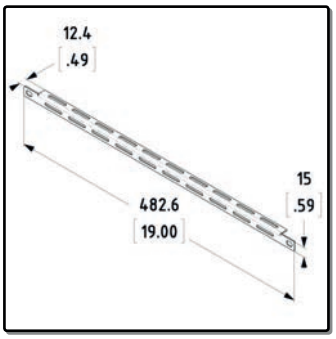

19" Kabelbefestigung

19" Rack Mount Cable Support Tie-bar

Steel *0,200 kg/St* *Black*

R2860

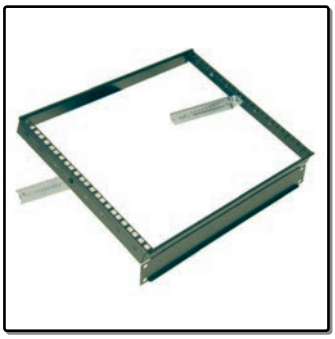

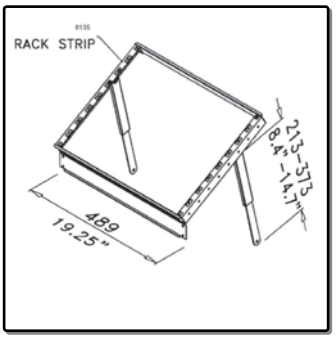

Aufstellbarer Rahmen
für Rackschiene 6135
Rackschiene 6135 wird nicht mitgeliefert
Tiltable Racking Frame
For use with Steel Rack Strip 6135
Order Rackstrip 6135 seperately

Steel *3,000 kg/St* *Black*

R1209/01

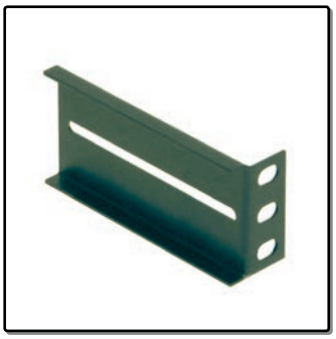

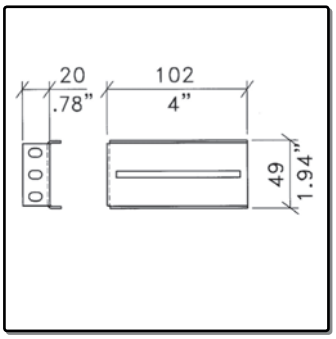

19"-Montagebügel für Teleskopschienen
Passend zu 643. Serie + R24.. Serie

1U Rack Mounts for Drawer Slides
Suits 643. Serie + R24.. Serie

Steel *0,076 kg/St* *Black*

R2410z - R2418z

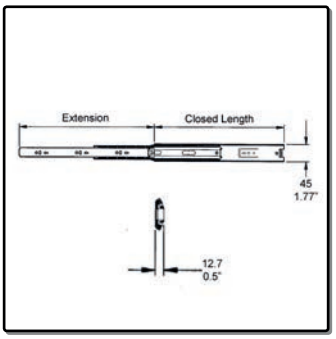

Teleskop-Vollauszüge für 45kg Belastung
25cm, 30cm, 35cm, 40cm und 45cm Länge
aushängbar und mit Schließstop
Drawer Slide, Load Rating 45kg/P.
Length: 25cm, 30cm, 35cm, 40cm and 45cm
Trigger Release Disconnect

Steel *1.200 kg/P.* *Zinc*

R2420z - R2428z

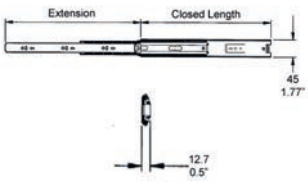

Teleskop-Vollauszüge für 45kg Belastung
50cm, 55cm, 60cm, 65cm und 70cm Länge
aushängbar und mit Schließstop
Drawer Slide, Load Rating 45kg/P.
Length: 50cm, 55cm, 60cm, 65cm and 70cm
Trigger Release Disconnect

Steel *1.200 kg/P.* *Zinc*

6435s - 6460s

Teleskop-Vollauszüge für 45kg Belastung
35cm, 40cm, 45cm, 50cm und 60cm Länge
aushängbar und mit Schließstop
Drawer Slide, Load Rating 45kg/P.
Length: 35cm, 40cm, 45cm, 50cm and 60cm
Trigger Release Disconnect

Steel *1.200 kg/P.* *Black*

6435As - 6450As

Aufsteckwinkel für Teleskopauszüge
35cm, 40cm, 45cm und 50cm Länge
passend zu 6435s - 6460s
L-Angle for Drawer Slide
35cm, 40cm, 45cm and 50cm Length
Fits to 6435s - 6460s

Steel *0,200 kg/P.* *Black*

Neutrik-Steckverbindungen - Neutrik Connectors

VN-NP2X

Neutrik-Jack, mono, Stecker

Neutrik Jack, Mono

VN-NP2RX

Neutrik-Jack, mono, Winkelstecker
VN-NP2RX-BAG: schwarz

Neutrik Jack, Mono, 90°
VN-NP2RX-BAG: Black

VN-NP3X

Neutrik-Jack, stereo, Stecker

Neutrik Jack, Stereo

VN-NP3RX

Neutrik-Jack, stereo, Winkelstecker

Neutrik Jack, Stereo, 90°

VN-NC3FXX

Neutrik-XLR, female, Stecker
VN-NC3FXX-BAG: schwarz

Neutrik XLR Cable, Female
VN-NC3FXX-BAG: Black

VN-NC3FRX

Neutrik-XLR, female, Winkelstecker

Neutrik XLR Cable, Female, 90°

VN-NC3MXX

Neutrik-XLR, male, Stecker
VN-NC3MXX-BAG: schwarz

Neutrik XLR Cable, male
VN-NC3MXX-BAG: Black

VN-NC3MRX

Neutrik-XLR, male, Winkelstecker

Neutrik XLR Cable, male, 90°

VN-NC3MDLX

Neutrik-XLR, male, Chassis D

Neutrik XLR Chassis, Male, D Size

VN-NC3FDLX

Neutrik-XLR, female, Chassis D
VN-NC3FDLX-BAG: schwarz

Neutrik XLR Chassis, Female, D Size
VN-NC3FDLX-BAG: Black

VN-NC5FXX

Neutrik-XLR, 5-polig, female, Stecker

Neutrik XLR Cable, 5 Way, Female

VN-NC5FRC

N.-XLR, 5-polig, female, Winkelstecker

Neutrik XLR Cable, 5 Way, Female, 90°

VN-NC5MXX

Neutrik-XLR, 5-polig, male, Stecker

Neutrik XLR Cable, 5 Way, Male

VN-NC5MRX

N.-XLR, 5-polig, Male, Winkelstecker

Neutrik XLR Cable, 5 Way, Male, 90°

VN-NC5MDLX

Neutrik-XLR, 5-polig, male, Chassis D
VN-NC3MDLX-BAG: schwarz

Neutrik XLR Chassis, 5 Way, Male
VN-NC3MDLX-BAG: Black

VN-NC5FDLX

Neutrik-XLR, 5-polig,female, Chassis D

Neutrik XLR Chassis, 5 Way, Female

VN-NL2FX

Neutrik-Speakon, 2-polig, Stecker

Neutrik Speakon Cable, 2 Way

VN-NL4FX

Neutrik-Speakon, 4-polig, Stecker

Neutrik Speakon Cable, 4 Way

VN-NL4MP

Neutrik-Speakon, 4-polig, Chassis D

Neutrik Speakon, Chassis, D Size

VN-NL4MPR

Neutrik-Speakon, 4-polig, Chassis D rund

Neutrik Speakon, Chassis, D Size, Rounded

VN-NL4MMX

Neutrik-Speakon, 4-polig, Kupplung

Neutrik Speakon Adapter, 4 Way

VN-NL8FC

Neutrik-Speakon, 8-polig, Stecker

Neutrik Speakon Cable 8 Way

VN-NL8MPR

Neutrik-Speakon, 8-polig, Chassis

Neutrik Speakon 8 Way, Chassis

VN-NJ3FP6C

Neutrik-Jack, stereo, female, Chassis D
VN-NJ3FP6C-BAG: schwarz

Neutrik Chassis, Jack Female, Stereo
VN-NJ3FP6C-BAG: Black

VN-NJ3FC6

Neutrik-Jack Stecker, stereo, female

Neutrik Cable Jack Female , Stereo

VN-NYS373-0

Neutrik NYS-Cinchstecker schw. Markierg.

Neutrik NYS Cinch Black Mark

VN-NYS373-2

Neutrik NYS-Cinchstecker
roter Markierung

Neutrik NYS Cinch Red Mark

VN-NF2D-0

Neutrik-Buchse, Cinch, schw. Isolierung

Neutrik chassis, Cinch, Black Isolation

VN-NF2D-2

Neutrik-Buchse, Cinch, roter Isolierung

Neutrik chassis, Cinch, Red Isolation

VN-NBB75DFG

Neutrik BNC-Buchse, Nickel
VN-NBB75DFG-B: schwarz

Neutrik Chassis, BNC
VN-NBB75DFG-B: Black

VN-NAC3FCA

Neutrik-Powerconnector, female, Stecker

Neutrik Power Connector, Cable Female

VN-NAC3FX

Neutrik-Power Con True1
Kabelbuchse mit Sicherheitsklinke

Neutrik-Power Con True1
Cable Female

Neutrik-Steckverbindungen - Neutrik Connectors

VN-NAC3MX

Neutrik-Power Con True1
Kabelstecker mit sicherheitsklinke

Neutrik-Power Con True1
Cable Male

VN-NAC3MPX

Neutrik-Power Con True1
Chassis Male

Neutrik-Power Con True1
Chassis Male

VN-NAC3FPX

Neutrik-Power Con True1
Chassis Female

Neutrik-Power Con True1
Chassis Female

VN-NAC3PX

Neutrik-Power Con True1
Chassis Male und Female

Neutrik-Power Con True1
Chassis Male and Female

VN-NAC3FCB

Neutrik-Powerconnector, male, Stecker

Neutrik Power Connector, Cable male

VN-NAC3MPA

Neutrik-Powerconnector, male, Chassis D

Neutrik Power Connector, Chassis Male

VN-NAC3MPB

Neutrik-Powerconnector, female
Chassis D

Neutrik Power Connector, Chassis Female

VN-NAC3MM

Neutrik-Powerconnector, Kupplung

Neutrik Powerconnector Adapter

VN-NAUSB

Neutrik-Buchse mit rev. USB-Adapter
VN-NAUSB-B: schwarz

Neutrik Chassis USB
VN-NAUSB-B: Black

VN-NA1394-6

Neutrik-Buchse mit Firewire 6 -Adapter
VN-NA1394-B: schwarz

Neutrik Chassis Firewire 6
VN-NA1394-B: Black

VN-NE8FDP

Neutrik- Ethercon D, RJ45 Chassis
VN-NE8FDP-B: schwarz

Neutrik Ethercon D, RJ45 Chassis
VN-NE8FDP-B: Black

VN-NE8MC

Neutrik- Ethercon D, RJ45 Stecker
VN-NE8MC-B: schwarz

Neutrik Ethercon D, RJ45 Cable
VN-NE8MC-B: Black

VN-XXCR

Codierring für Neutrik XLR-Stecker

Clear Coding Ring for Neutrik XLR Series

T1485 - T1495

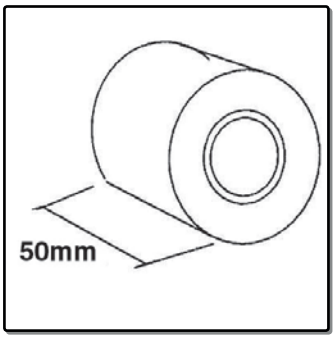

Penn Elcom Tape 50mm x 50m
T1485: weiß, T1490: grau
T1495: schwarz
Penn Elcom Tape 50mm x 50m
T1485: White, T1490: Grey
T1495: Black

0,500 kg/St *White, Grey and Black*

9800g - 9800s

Original Nichiban Tape 50mm x 50m
9800g: grau
9800s: schwarz
Original Nichiban Tape, 50mm x 50m
9800g: Grey
9800s: Black

0,800 kg/St *Black, Grey*

9801w - 9802w

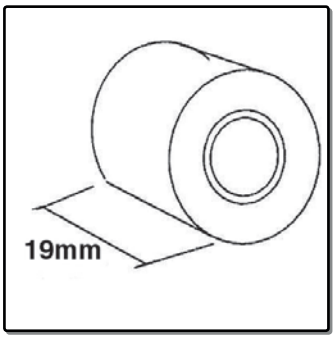

Original Nichiban Tape weiß
9801w: 19mm x 50m
9802w: 50mm x 25m
Original Nichiban Tape, White
9801w: 19mm x 50mm
9802w: 50mm x 25m

0,250 kg/St *White*

MI-19009-MI-19011

Tour Label, selbstklebend, Econony
MI-19009: 210x150mm
MI-19011: 130x85mm
Tour Label, selfadhesive, Economy
MI-19009: 210x150mm
MI:19011: 130x85mm

Plastic *0,050 kg/St*

D2101L - D2117L

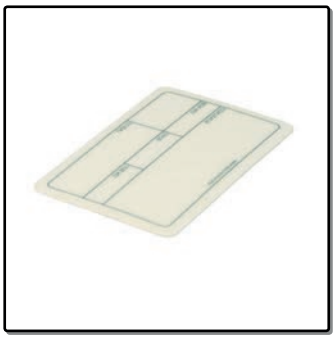

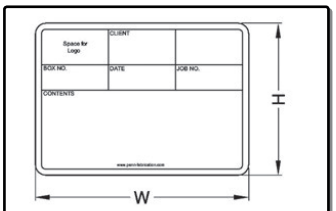

LABLE	W	H
D2101L	130	85
D2115L	177	127
D2116L	210	150
D2117L	290	190

Tour Label, selbstklebend
passend zu Einbauschalen D2101, D2115
D2116 und D2117
Tour Labels, Selfadhesive
Fits Dishes D2101, D2115
D2116 and D2117

Plastic *0,006 kg/St*

D2115 - D2117

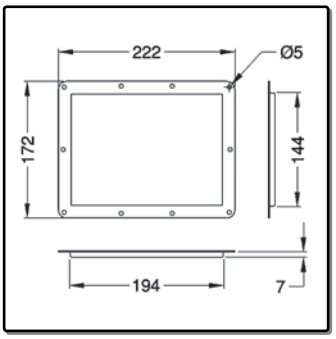

Einbauschalen für Tourlabels
passend zu D2115L, D2116L und D2117L

Dish for Tourlabels
Fits D2115L, D2116L and D2117L

1.2mm Steel *0,300 kg/St* *Zinc*

On Tour - On Tour

A2517

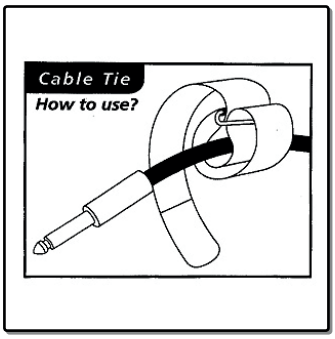

Kabelbinder 170x25 mm, Hakentip blau
-500: schwarz, -520: grau, -600: rot
-700: gelb, -820: grün
Cable Tie, 25x170mm, Hook Blue
-500: Black, -520: Grey, -600: Red
-700: Yellow, -820: Green

0,004 kg/St Bl/Blue

A2522

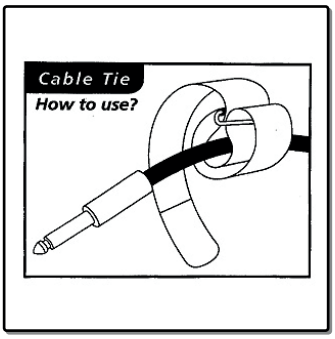

Kabelbinder 220x25 mm, Hakentip blau
-500: schwarz, -520: grau, -600: rot
-700: gelb, -820: grün
Cable Tie, 25x220mm, Hook Blue
-500: Black, -520: Grey, -600: Red
-700: Yellow, -820: Green

0,004 kg/St Bl/Blue

A2530

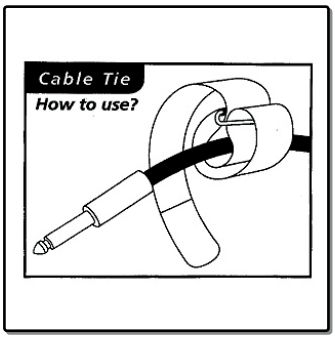

Kabelbinder 300x25 mm, Hakentip blau
-500: schwarz, -520: grau, -600: rot
-700: gelb, -820: grün
Cable Tie, 25x300mm, Hook Blue
-500: Black, -520: Grey, -600: Red
-700: Yellow, -820: Green

0,004 kg/St Bl/Blue

A2541

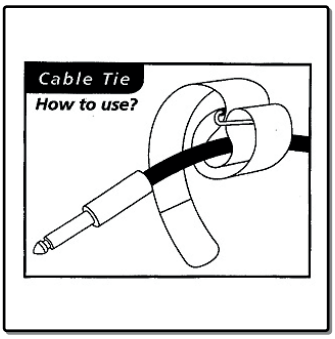

Kabelbinder 410x25 mm, Hakentip blau
-500: schwarz, -520: grau, -600: rot
-700: gelb, -820: grün
Cable Tie, 25x410mm, Hook Blue
-500: Black, -520: Grey, -600: Red
-700: Yellow, -820: Green

0,004 kg/St Bl/Blue

A5017

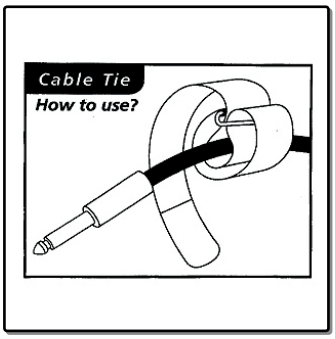

Kabelbinder 170x50 mm, Hakentip blau
A5030: 300x50mm, Hakentip Blau
A5041: 410x50mm, Hakentip Blau
Cable Tie, 50x170mm, Hook Blue
A5030: 300x50mm, Hook Blue
A5041: 410x50mm, Hook Blue

0,004 kg/St Bl/Blue

A5055

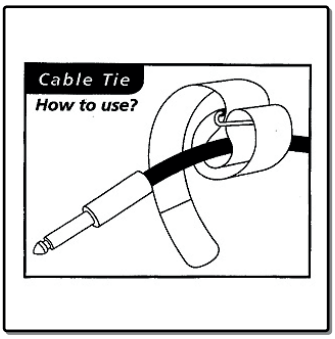

Kabelbinder 550x50 mm, Hakentip blau
A5071: 710x50mm, Hakentip Blau

Cable Tie, 50x550mm, Hook Blue
A5071: 710x50mm, Hook Blue

0,004 kg/St Bl/Blue

T1513/200

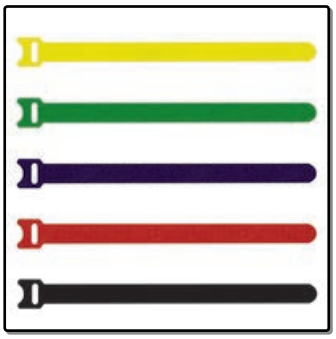

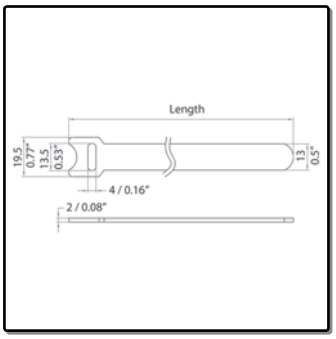

Velcro Kabelbinder 200x13mm
Lieferbar in den Farben schwarz, blau, rot, grün und gelb
Velcro Cable Tie 200x13mm
Available in Black, Blue, Red, Green and Yellow

0,050 kg/St

T1513/300

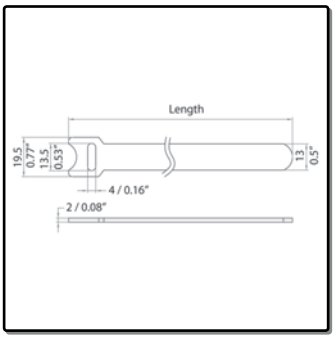

Velcro Kabelbinder 300x13mm
Lieferbar in den Farben schwarz, blau, rot, grün und gelb
Velcro Cable Tie 300x13mm
Available in Black, Blue, Red, Green and Yellow

0,050 kg/St

MI-TIS50100

HD Kabelbinder 1m x 25 mm, schwarz
Andere Farben und Längen auf Anfrage
Min. Abnahme: 300Lfm
HD Cable Tie, 1m x 25mm
Other Colours or Length on request
Min. Order Quantity: 300m

0,050 kg/St Black

6518 - 6518FR

1HE-Leiste mit 8 Steckdosen
6518: mit SCHUKO-Steckdosen
6518FR: französische/belgische Erde
1U Powerbox, 8x Front
6518: SCHUKO Socket
6518FR: French/Belgium Socket

Steel 0,700 kg/St Black

6516 - 6516FR

1HE-Leiste mit 8 Steckdosen und Schalter
6516: mit SCHUKO-Steckdosen
6516: französische/belgische Erde
1U Powerbox, 8x Front + Switch On/Off
6516: SCHUKO Socket
6516FR: French/Belgium Socket

Steel 0,700 kg/St Black

6517

1HE-Leiste, 8 rückseitige Dosen
Schalter frontseitig

1U Powerbox, Switch On/Off Front
+ 8 x Rear

Steel 0,700 kg/St Black

On Tour - On Tour

MI-ENR3

Diameter	Max. Cable Length
10mm	450m
12mm	330m
16mm	190m
20mm	120m
24mm	80m
28mm	60m
30mm	52m

Kabeltrommel 680x450x450mm
Stapelbar

Cabledrum 680x450x450mm
Stackable

Steel *20 kg/St* *Black*

MI-ENR2

Diameter	Max. Cable Length
10mm	340m
12mm	240m
16mm	140m
20mm	80m
24mm	56m
28mm	40m
30mm	36m

Kabeltrommel 530x450x450mm
Stapelbar

Cabledrum 530x450x450mm
Stackable

Steel *17 kg/St* *Black*

MI-ENR1

Diameter	Max. Cable Length
10mm	250m
12mm	175m
16mm	100m
20mm	60m
24mm	45m
28mm	30m
30mm	28m

Kabeltrommel 450x450x450mm
Stapelbar

Cabledrum 450x450x450mm
Stackable

Steel *16 kg/St* *Black*

MI-ENR/MAN

Kurbel für ENR Serie

Handle ENR Serie

Steel *0,150 kg/St* *Black*

MI-MGP

Bodenstativ für Scheinwerfer

Floorstand

Steel *0,400 kg/St* *Black*

XT1801

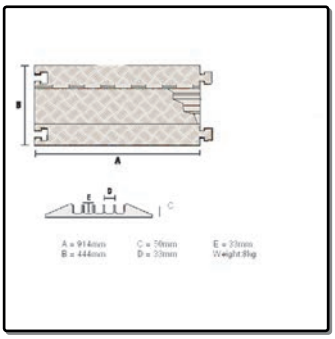

Kabelbrücke, 914mm

Cable protector. Straight section.

Polyurethan *10,000 kg/St* *B/0range*

MI-MOLLY

Multifunktions Tool
für Kino, Theater und Events

Multifuntional Tool
Used in Cinema, Theatre and Events

Steel *0,420 kg/St* *Blank*

xi599

Alu-Schilder mit Ihrem Logo

Aluminium Label on Your Specification

Aluminium *0,010 kg/St*

M1475 - M1485

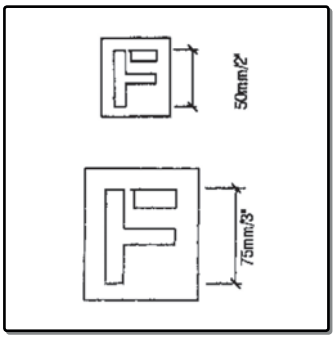

Beschriftungsset 76 Teile
M1475: 50mm, M1480: 75mm, M1485:25mm

Interlocking Stencils, 76 Parts
M1475: 50mm, M1480: 75m2, M1485:25mm

ABS *0.500 kg* *Brass*

Aluminium Transformer Box

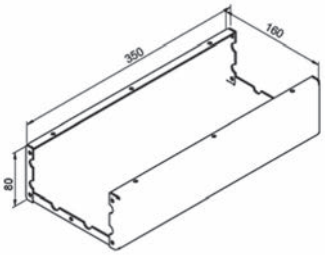

MI-TB300

MI-TB300 350x160x80mm
Unterteil
Chassis
Black, 0.546Kg/St.

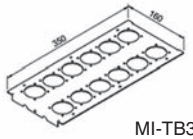
MI-TB301

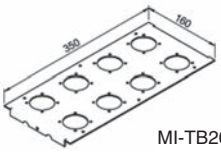
MI-TB201

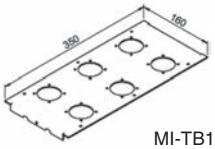
MI-TB101

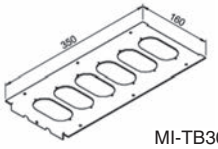
MI-TB302

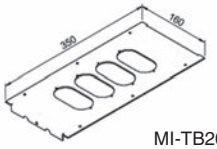
MI-TB202

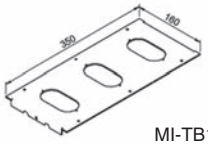
MI-TB102

***Oberteil*/Up Part** 350x160mm

MI-TB301	12 Schuko 16A
MI-TB201	8 Schuko 16A
MI-TB101	6 Schuko 16A
MI-TB302	6 Double Schuko 16A
MI-TB202	4 Double Schuko 16A
MI-TB102	3 Double Schuko 16A

Black, 0.195Kg/St.

MI-TB01

MI-TB02

MI-TB03

MI-TB04

MI-TB05

MI-TB06

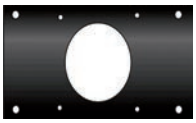
MI-TB-07

***Seitenteile*/Lateral Part** 160x80mm

MI-TB01	Plain
MI-TB02	1 x PG29
MI-TB03	1 x Diam 38mm
MI-TB04	1 x Harting 16/40/72
MI-TB05	1 x Harting 24/64/108
MI-TB06	1 x Diam 46mm
MI-TB07	1 x Socapex

Black, 0.053Kg/St.

Schrauben sind enthalten
Screws are included

Clamp for Lighting Truss

MI-CPR50JNPAPITBULL

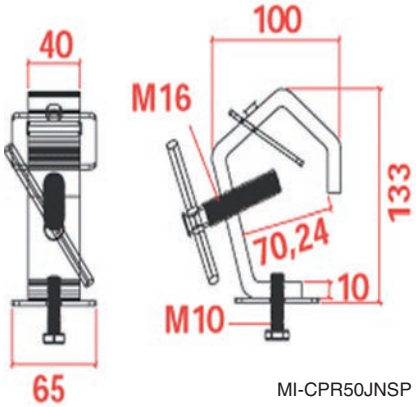

MI-CPR50JNSP

MI-CPR50Z

MI-CPR50ZP

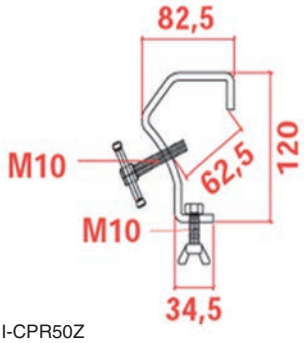

MI-CPR50Z

MI-LINGGM

MI-CPR30Z

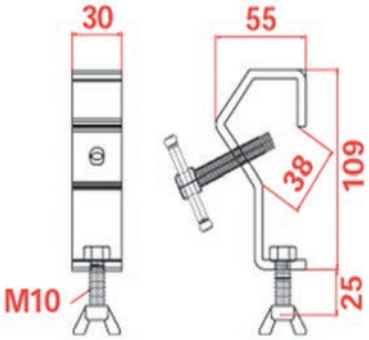

MI-CPR30Z

MI-PC01

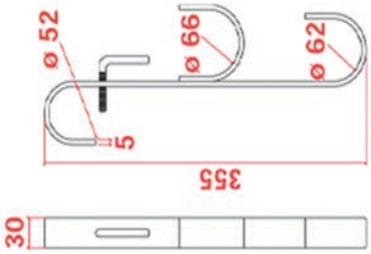

MI-PC01

MI-CPR50JNPAPITBULL
Made for heavy duty spotlights in UP position on the Truss. Big Butterfly Screw for a better and easier Spot mounting

Suits 50mm Tube	American Screw M16
10mm Steel	Strong Backplate
Easy Fitting/Unfitting	1,16 kg/St

MI-CPR50JNSP

Pro Standard Clamp	Suits 50/60mm Tube
EU Screw	10mm Steel
Separate Screw	1,16 kg/St

MI-CPR50JN

Pro Standard Clamp	Suits 50/60mm Tube
EU Screw	10mm Steel
No Separate Screw	1,16 kg/St

MI-CPR49JNSP

Pro Standard Clamp	Suits 50mm Tube
EU Screw	10mm Steel
Separate Screw	1,16 kg/St

MI-CPR50Z (zinc) **MI-CPR50ZN** (black)

Standard Clamp	Suits 50mm Tube
EU Screw	6mm Steel
No Separate Screw	0,42 kg/St

MI-CPR50ZP

Standard Clamp	Suits 50mm Tube
EU Screw	6mm Steel
Separate Screw	0,42 kg/St

MI-LINGGM
Backplate suits MI-CPR50 and MI-CPR50ZP

MI-LINGGMN
Backplate suits MI-CPR50ZN

MI-CPR30Z (zinc) **MI-CPR30ZN** (black)

Standard Clamp	Suits 30mm Tube
EU Screw	3mm Steel
0,32 kg/St	

MI-PC01 (zinc) **MI-PC01N** (black)
Clamp for Cable Cross

Index

0100 8
0105 12
0106 12
0112 12
0113 9
0121 8
0122 8
0125 8
0126 8
0130 8
0151 9
0152 9
0153 9
0154 12
0156 9
0162 10
0166 12
0170 9
0300 16
0301 17
0303 16
0305 16
0310 16
0315 16
0320 16
0321 17
0330 19
0400 10
0405 10
0415 10
0425 10
0445 11
0450 11
0452 11
0455 11
0470 11
0490 15
0500 17
0520 18
0520/3 18
0521 18
0522 18
0523 18
0524 18
0581 17
0590 19
0591 17
0600 13
0600 86
0611 14
0611 86
0620 14
0620 86
0631 14
0632 14
0640 14
0650 13
0655 13
0658 14
0690 21
1050 29
1100c 32
1105c 32
1130 31
1302 39
1312 40
1360 39
1365 39
2190 90
2195 90
2270c 53
2300 47
2455 51
2470 51
2472 51
2480s 51
2495s 51
2590 55
3020 56
3021 58
3022 58
3050 62
4080 67
4200 68
4210 68
4230 69
4245 69
4260 70
4319 71
4512 67
4515 67
5104 73
5114 73
5200 74
5210 74
5220 74
6000 21
6010 22
6010/2 - 6110/2 23
6010/3 23
6020 21
6030 22
6030/1 23
6060 21
6102 21
6108 21
6110 22
6110/1 23
6131 22
6131/1 - 6010/1 23
6135 20
6135-.. 20
6135/M6 20
6145 20
6145-.. 20
6145/M6 20
6190 23
6339 ...116
6420 - 6422 89
6435As - 6450As 89
6435As - 6450As ...119
6435s - 6460s 89
6435s - 6460s ...119
6516 - 6516FR ...109
6516 - 6516FR ...125
6517 ...109
6517 ...125
6518 - 6518FR ...109
6518 - 6518FR ...125
6549 ...108
6551 ...108
6712 88
6715 88
7250 ...114
7251 ...106
8005 5
8010 5
8015 5
8018 5
8020 5
8030 5
8040 5
8050 5
8060 5
8080 5
8090 5
8099 5
8105 5
8110 5
8115 5
8120 5
8130 6
8140 6
8150 6
8180 6
8199 6
8208 7
8251 86
8253 7
8254 7
8305 7
8310 7
8450 88
8510 6
8515 6
8520 6
8530 6
8540 6
8550 6
8610s 85
8651 88
8652 88
8710G 7
8710G 85
8715G 7
8715G 85
8820 6
8830 6
8840 6
8850 6
9539n - 9543c 91
9567 91
9620 77
9645 78
9714-7016 84
9714-9010 84
9714s 84
9715s 84
9720 84
9721 84
9800g - 9800s ...123
9801w - 9802w ...123
9810/1 - 9810/2 91
9829 95
9830 95
9831 95
9832 95
9845 95
9846 95
9910 ...104
A1260 ...104
A2517 ...124
A2522 ...124
A2530 ...124
A2541 ...124
A5017 ...124
A5055 ...124
A5250 76
A5251 76
B0700z 41
B0702z 40
B0706n 41
B0715z 41
B1115z 40
B1121 39
B1123z 38
B1124 40
B1125 39
B1126 38
B1128z 38
B1130z 42
B1131z 38
B1134z 42
B1135z 42
B1136z 38
B1141z 41
B1610z 87
B1630z - B1631z 87
B1640z - B1641z 87
B1925 40
B1928 40
B1930z 39
BE-5388g 93
C0650z 26
C0651z 26

C0651z 26
C0658 26
C0670n 32
C0675/30z 33
C0675z 31
C0696z 36
C0697z 30
C1080z 27
C1081z 28
C1082z 30
C1150z 31
C1214 96
C1335k 96
C1339/01z 25
C1339/30z 25
C1339/31z 26
C1339z 25
C1340z 26
C1341/30-35z 25
C1341/31-35z 25
C1343 28
C1344z 28
C1345-01z 28
C1345z 28
C1346z 30
C1347z 28
C1349z 30
C1351/00/R5z 35
C1351/01/R5z 35
C1351/01z 27
C1351z 27
C1352 27
C1352/00/R5z 35
C1353/00/R5z 35
C1353z 27
C1359z 29
C1363z 36
C1364z 36
C1365 35
C1366z 35
C1373 29
C1373/R5z 36
C1374 - C1374/10z 29
C1377/01z 34
C1377/30z 34
C1377/31z 34
C1377z 34
C1384z 26
C1536 96
C1537 96
C1567 96
C1568 96
C1817k 97
C1819k - C1819n 97
C1821k 97
C1823k 97
C1824k - C1824n 97
C1850z 36
C1855z 36
C1935z 31
C1980 30
C1993/01z 34
C1993/3ez 25
C1993z 34
C7079z 37
C7082/01z 32
C7082/04z 32
C7082z 31
C7084z 37
CE-1026 29
CE-1054 33
CE-1054 92
CE-8579 29
CF-8509 27
CF-8551z 31
CF-8571 30
CMU-1 ...118
CO-4264c 32
CO-4349c 33
CO-4358c 33
Coolrac ...108
CPU-87B - CPU87S 91
D0037z 49
D0047z 49
D023k ...105
D024 ...105
D0506/07z 81
D0511/07z 82
D0516/07z 82
D0536/07z 81
D0554z 59
D0558z 59
D0593z 60
D0597z 60
D0604z ...105
D0941/10z ...105
D0941/5 76
D0941/5 81
D0941z 81
D0946/10z ...106
D0946z 82
D0947 ...106
D0949z ...106
D2101/04 81
D2101k-NLT4 ...105
D2101L - D2117L ...123
D2101z 81
D2115 - D2117 ...123
D2501PW 83
D9802k ...105
E0826 19
E0850 17
E2207 - E2212 15
E2226 13
E2226 86
E2255 10
E2375 19
E4007 13
E4007 87
E4009 13
E4009 87
EX-6301B ...110
F0615z 78
F0616z 78
F0620z 78
F0621z 78
F0622 79
F0624 79
F0690 78
F1241 80
F1550 - F1950 80
F1555 77
F1556 77
F1615 77
F1631 77
F1633 77
F1642 79
F1686 77
F1686/20 77
F1686/25 77
F1687 77
F1691 77
F1692 77
F1693 77
F1694 77
F1697 77
F1698/LD 77
F1699/LD 79
F3852 79
FE-6125 92
FE-6225 92
FE-6228 92
FT-01-Q ...108
FU-EM-600 ...108
FU-EM-800-1000 ...108
G06 - G18 ...106
G0710 ...107
G0727 ...107
G1560z 82
G1570 90
G1701 - G1703 ...116
H1006 ...100
H1008 68
H1008 98
H1008br 68
H1008br 98
H1008t 68
H1008t 98
H1009/01 71
H1010k - H1010z 71
H1013 71
H1015 99
H1016 ...101
H1017 ...100
H1024 99
H102490 ...100
H1025 66
H1027 98
H1027/DB 98
H1028 ...100
H1028CUP/FXH ...100
H1030R 66
H1030z 66
H1050 63
H1053z 65
H1065/BP 64
H1070 98
H1076 ...100
H1078z 65
H1079 66
H1080 66
H1080 93
H1085 - H1085k 64
H1105 99
H1105G 99
H1107 99
H1190 70
H1195 71
H14001 56
H1423 69
H1425 69
H1430 70
H1431 - H1432 68
H1435z - H1435k ...104
H1906 64
H2000 - H2017 67
H2001 67
H2751 64
H4051z 65
H4116 67
H7148z 63
H7149z 64
H7150/06 65
H7150/85 65
H7150Ez 63
H7151s 64
H7159L 63
H7159z 63
H7165-10z 63
H8012 71
H8805-06 99
HE-2341AL 65
HE-2457 66
HE-2457 93
HO-7960k 69
HO-7960Tk 69
ID Strip ...118
L0355k 55
L0526 44
L0559s 54
L0560z 53
L0565z 53
L0575c - L0575k 53
L0737/28z - /64z 48
L0737/BP 48
L0737/CP 48
L0747/28z - /68z 47
L0747/50z 47
L0747/BP 48
L0747/CP 48
L090555/CP 49
L090555/CP 94
L0906 46
L0914z 50

Index

L0914z 50
L0915-12k - 15k ...107
L0915z 50
L0922-TSA 55
L0925z 50
L0926/90 50
L0926z 50
L0930 49
L0930/Cpz 49
L0935z 50
L0965/CP 49
L0967z 48
L1037z 51
L785/790z 52
L844/837-10z 44
L903-7336z 47
L904/914z 47
L905/915 45
L905/915/07z 45
L905/915/10z 45
L905/927TSAz 46
L905/928z 45
L907/915PBz 46
L907/915z 46
L907/928 45
L9075/915 46
L9075/928 45
L908/915 46
L911/530z 43
L911/537z 43
L924/525/CL 44
L925/530-38 43
L925/537-38 43
L935/530z 44
L935/537z 44
L944/530 43
L944/537z 43
LE-1097/2 54
LE-1099/1 54
LE-1099/1 94
LE-1652 92
LE-2698 57
LE-2698 93
LE-3759 47
LE-4880 55
LE-8332/2 54
LE-8338/1 54
LE-8338/1 94
LO-1614A/A-42c 54
LO-1621A/A-41c 53
LO-1645A/A-42c 52
LO-1645C/C-42c 52
LO-1648A/A-33c 53
LO-1649A/A-42c 52
LO-1650C/C-42c 52
LO-1652A/A-42c 52
M1475 - M1485 ...127
M1538 ...102
M154312 ...102
M1551 ...102
M1557 ...102
M1557/M20 ...101
M1701 ...101
M1702 ...101
M1703 ...101
M1704 ...101
M1815 88
M204306 - M204312...102
M3555 ...102
M5000 - M5005 85
M5000 - M5005 ...107
M6900 7
MI-19009-MI-19011 ...123
MI-ENR/MAN ...126
MI-ENR1 ...126
MI-ENR2 ...126
MI-ENR3 ...126
MI-MGP ...126
MI-MOLLY ...127
MI-TIS50100 ...125
MX91155 86
NC2W65/HK 75
P0610n 58
P06217z 62
P0625z 62
P0635n 58
P1235 62
P1246n 62
P1247z 62
P1250-10 87
P1321Pn 56
P1325-25n 61
P1325n 61
P1350 - P1350P 56
P1361 - P1363 56
P1390GLV 92
P1945 61
P1990 60
P1993z 60
P1995ez 60
P2558z 59
P2597z 59
P50030/22/R1z 38
P50030/22/R1z 57
P50030/22/R5z 42
P50030/22/R5z 57
P81506z 56
P81570z 58
PE-1522 59
PE-1535 58
PE-1544 57
PE-1903 - 1904 57
PE-1903 - 1904 93
PE-1906 - 1908 57
PE-1906 - 1908 93
PM6CNK 22
PO-4270-32c 61
PO-4440-41c 59
PO-4467-42c 61
PO-4468-42c 60
PO-4477-42c 61
R0855k - R0858k 22
R1191/1Uk ...111
R1194/1Uk - 4Uk ...111
R1194/2Uk-SL ...110
R1206/1Uk - 4Uk ...111
R1209/01 ...118
R1265/3Uk 70
R1267/1UVk - 3UVk ...112
R1268/1Uk/05TR ...115
R1268/1Uk/CTB - 2U...115
R1268/1Uk-PBS - 2U..117
R1268KB ...117
R1269/1Uk - 3Uk ...114
R1269/1Uk/08CTF ...114
R1269/1Uk/12- 3Uk/ ...114
R1269/1Uk/16- 3Uk/ ...114
R1272/2Uk - 4Uk ...117
R1272/2UVk - 6UVk ...117
R1279/1Uk - 2Uk ...112
R1280/1Uk ...115
R1282/1U ...115
R1284/2Uk ...114
R1284/3Uk-12 ...113
R1286/0.5UVk- 4UVk..112
R1287/1Uk - 3Uk ...117
R1290/1U ...110
R1291k ...110
R1291k/2L ...110
R1292-KBT ...110
R1299/3Uk ...117
R1305 ...111
R1307 - R1309 ...115
R1311 ...118
R1325 90
R1329-SL 90
R1380/2UK - 4Uk ...109
R1434 ...103
R1436 ...104
R1436/BP ...104
R1437 ...103
R1438 ...103
R1439 ...103
R1600 90
R1737M ...103
R1738Mz ...103
R2100/1Uk - 4Uk ...109
R2110/1Uk - 4Uk ...109
R2410z - R2418z 89
R2410z - R2418z ...118
R2420z - R2428z 89
R2420z - R2428z ...119
R2510/1U - 4U ...111
R2860 ...118
R8010 ...111
RI-0047 ...113
RI-0055 - RI-0056 ...113
RI-0100/sp1 ...116
RI-0100/sp2 ...116
RI-0100/sp3 ...116
RI-0100/sp4 ...116
RI-0143 ...112
RI-0145 ...112
RI-0152 ...113
RI-0154 ...113
RI-0155 ...112
RI-0156 ...113
S1905/11 ...115
S1940 24
SO-3124c 91
sqm ...106
T1485 - T1495 ...123
T1513/200 ...125
T1513/300 ...125
VN-NA1394-6 ...122
VN-NAC3FCA ...121
VN-NAC3FCB ...122
VN-NAC3FPX ...122
VN-NAC3FX ...121
VN-NAC3MM ...122
VN-NAC3MPA ...122
VN-NAC3MPB ...122
VN-NAC3MPX ...122
VN-NAC3MX ...122
VN-NAC3PX ...122
VN-NAUSB ...122
VN-NBB75DFG ...121
VN-NC3FDLX ...120
VN-NC3FRX ...120
VN-NC3FXX ...120
VN-NC3MDLX ...120
VN-NC3MRX ...120
VN-NC3MXX ...120
VN-NC5FDLX ...120
VN-NC5FRC ...120
VN-NC5FXX ...120
VN-NC5MDLX ...120
VN-NC5MRX ...120
VN-NC5MXX ...120
VN-NE8FDP ...122
VN-NE8MC ...122
VN-NF2D-0 ...121
VN-NF2D-2 ...121
VN-NJ3FC6 ...121
VN-NJ3FP6C ...121
VN-NL2FX ...121
VN-NL4FX ...121
VN-NL4MMX ...121
VN-NL4MP ...121
VN-NL4MPR ...121
VN-NL8FC ...121
VN-NL8MPR ...121
VN-NP2RX ...120
VN-NP2X ...120
VN-NP3RX ...120
VN-NP3X ...120
VN-NYS373-0 ...121
VN-NYS373-2 ...121
VN-XXCR ...122
W0093 73
W0094 72
W0958 76
W0964 76
W0964 82

Index

W0968	76	W8675/HD	74	x15046s	4
W0968z	82	W8996 - W8998	79	x15070b	4
W0975	72	x10065	3	x15070g	4
W0975/80	73	x10090	3	x15070r	4
W0985	72	x10120	3	x15070s	4
W0985/80	73	x10150	3	x15070si	4
W0990	72	x10180	3	x15100s	4
W0990/80	73	x11065	3	x15110s	4
W9980	72	x11065s	3	xi660	94
W2060 - W2060k	75	x11090	3	xi661	94
W2001	75	x11090s	3	xi662	94
W2100z	74	x11090sd	3	xi710-06	7
W8075z	75	x11120s	3	xi711	7
W8255	75	x11150s	3	xt1801	126
W8375z	75	x11180s	3		
W8675z	74	x15030s	85		

Checkliste / Check list 1
Case Designer 2a
N-Case 2 Case System 2e
N-Case 1 Case System 2g
Baumaterial-Oberflächen/ Laminated Panels 2i
Slam-Lid System 4a
Alveobloc 4b
Plywood-Con Pearl® > Extrusion Guide 7a
Anti-Vibration Rack System 19a
Extrusion > Corner and Brace Guide 24a
Smartlatch Case System 49a
TV-Lifter / TV lift 91a
Befestigungsmittel / Rivets - Screws 91b
Server-Schrank / Server Rack Enclosures 107a
Rack zur Wandmontage / Wall Mount Enclosures 107b
Rack zur Wandmontage / Double Section Wall Rack 107c
Flat Pack Racks 107d
Open Tower Rack System 107e
Schubladen mit Schloß / Rackdrawers with lock 107f
Aluminium Transformer Box 127a
Clamp for lighting truss 127b

Vertrieb Europa / Distribution Europe:

Penn Elcom GmbH
Dechant-Sprünkenstraße 49b
DE-46446 Emmerich
Germany

Phone: +49 2822913033
Fax: +49 28229130350
Mail: post.eu@penn-elcom.com
Web: www.penn-elcom.com

Austria
Phone: 00800-55566600
Fax: +49 28229130350
Mail: post@penn-elcom.at

Belgium
Phone: 00800-55566600
Fax: +49 28229130350
Mail: post.eu@penn-elcom.com

Denmark
Phone: 00800-55566600
Fax: +49 28229130350
Mail: post@penn-elcom.dk

France
Phone: 00800-55566600
Fax: +49 28229130350
Mail: post@penn-elcom.fr

Penn Elcom Germany
Phone: +49 2822913033
Fax: +49 28229130350
Mail: post.eu@penn-elcom.com

Italy (Valentini)
Phone: 0039 0119594160
Fax: 0039 0119594166
Mail: info@valentininet.com

Netherlands
Phone: 00800-55566600
Fax: +49 28229130350
Mail: post.eu@penn-elcom.com

Poland
Phone: +48 698168234 or +49 2822913033
Fax: +49 28229130350
Mail: info@penn-elcom.pl

Portugal
Phone: 00800-55566600
Fax: +49 28229130350
Mail: post@penn-elcom.pt

Spain
Phone: 00800-55566600
Fax: +49 28229130350
Mail: post@penn-elcom.es

Sweden (Joa Beslag AB)
Phone: +46 30245300
Fax: +46 30240066
Mail: info@joabeslag.se

Sweden (Holmberg)
Phone: +46 92214640
Fax: +46 92214690
Mail: info@hbc.se

Switzerland
Phone: 00800-55566600
Fax: +49 28229130350
Mail: post@penn-elcom.ch

Umka-1 Ltd
Phone: 0038 0444177575
Fax: 0038 0444177574
Mail: ymka_@voliacable.com